Content

LOGICAL TROUBLESHOOTING OF AUTOMOTIVE ELECTRONICS 5
Electrical Safety: 5
Electrical Generation: 6
Electrical Storage: 7
Electrical Distribution: 7
Atomic theory 7
Insulators 9
Conductors 9
Electrical Circuit Construction 10
Contact Diagnostics 10
Charge! 10
(Hypothetical) Electron Pump 10
Engine cooling Fan Example 11
Battery, the Electron Pump 11
Magnetism and Current Flow 11
Magnetic Field about a Wire 12
Water Pressure Analogy 12
The speed of electricity: 13
Pulleys require a loop 13
Test Equipment 13
Digital Volt Ohm Meter (DVOM) 14
Digital Storage Scopes (DSO) 14
Scan Tool 15
Let's get technical 15
What are we going to Measure? 15
Ohm's Law: 17
Diagnostic Logic 19
Identify Performance Problem 20
Circuit Analysis 20
Polarity 21

Automotive Circuits 21
Series Circuit 23
Voltage drops 24
Measuring voltage drop 25
Series circuit current flow 28
Voltage Across series connected loads 29
Parallel Circuits 32
Battery Connections 33
Circuit Diagnosis 34
Identify Performance Problems 35
Tail lamp example 36
Pin point the problem 36
Circuit Grounds 36
Control Module Grounds 37
Voltage drop testing 39
Electrolysis Can Be Measured 39
Schematic Diagrams 41
Pin point circuit problems 41
Area test example 42
Relay Operation 48
Factors Effecting Coil Current 48
Checking relay coil circuit 49
Relay Area Test 49
Relay Operational Check 50
Low side driver 51
Control Voltage too high 52
High Side Switching 53
More Complex Operation Analysis 55
Starter Relay power contacts 56
How we start an area test? 59
Analyze the diagram 60

Check the control circuit 63
Start signals to PCM 63
One touch operation 64
Power contacts 65
Electrically Testing DTCs: 66
Fuel injector testing: 70
Injector current testing: 72
Connection selection: 73
Orientation or polarity: 73
Low current probe position 75
Injector Current Waveform: 75
Fuel Pump Testing: 75
Batteries: 79
SLI battery: 79
AGM battery: 80
GEL battery: 80
CCA, CA, AH and RC battery ratings; 80
Conditions causing difficulties in charging a Battery: 81
Battery Packaging 81
State of Charge of a Battery: 82
Battery Temperature: 82
Three Minute Test: 83
Charging time and rate: 84
Battery Temperature: 85
Inductance: 86
Capacitance: 88
Battery Open Circuit Voltage: 89
Measure Specific Gravity: 91
Check the grounds: 92
DC Voltage: 93
AC Voltage: 93

Frequency (Hz): 93
Duty Cycle: 95
Diode: 95
Electrical units of measurement: 96
Digital Storage Scope (DSO) Fundamentals: 97
DSO Controls: 97
Trigger setting: 101
Crank and Cam Signals 104
Ignition Control Signals 104
Measuring Parasitic Draw: 104
Thermistor, Temperature sensors: 105
Solenoids: 110
Transducers (Sensors): 120
Manifold Absolute Pressure Sensor: 120
Mass Air Flow Sensor: 121
Fuel tank pressure sensor: 126
Diagnostics with Pressure Transducers: 127
Learn to read the pressure waveform: 128
Power Probe III: 135
Logic Probe: 136

LOGICAL TROUBLESHOOTING OF AUTOMOTIVE ELECTRONICS

Welcome to Logical Troubleshooting of Automotive Electronics. Today's vehicles are loaded with electrical components. Some are simple lamps while others are systems like computer controlled brakes. The simple truth is everything uses the same electrons from the same source.

Some say electrical problems are the most difficult to diagnose because you can't see electricity. When we have an oil leak the evidence is on the ground. Have you ever seen a puddle of electrons? Of course not, but that doesn't mean it's harder to work with than fuel or brake pressure in a line. When fuel pressure is being tested we aren't looking at the actual fuel, but rather the results of what it's doing. Reading the needle on a fuel pressure gauge isn't that much different from reading Voltages, Ohms, or Amperage on a DVOM.

In order to become an electrical diagnostician you must have test equipment, knowledge of electricity, and information. We will use equipment to test Volts, Ohms, and amperes. We need knowledge of electrical laws and rules. We will use information like vehicle and system specific schematics.

The information in this training course is about how the automotive uses electricity. There aren't any discussions about household or industrial electricity or any other application. We will keep electrical theory to the minimum need to know. The class isn't attempting to make you a double EE (electrical engineer) but rather a good diagnostician.

The class isn't laid out like most automotive training courses. Where all related subjects are grouped together for discussed. As an example in a drivability class all of the PCM inputs would be grouped together. Writing a class that way allows it to flows in a nature order and is easy to follow.

After general electrical information, we will attempt to follow up with an automotive example to demonstrate the law or principle that can be used in the service bay. It may seem like were jumping around in the subjects, but we are not. The goal is to help you learn automotive electrical and ensure that you can take the information to the service bay the next day to start using it quicker and more accurately in your diagnoses.

Electrical Safety:

The amount of current through a body is equal to the amount of voltage applied between two points on that body, divided by the electrical resistance offered by the body between those two points. Obviously, the more voltage available to cause electrons to flow, the easier they will flow through any given amount of resistance. Hence, the danger of high voltage: high voltage means potential for large amounts of current through your body, which will injure or kill you. Conversely, the more resistance a body offers to current, the slower electrons will flow for any

given amount of voltage. Just how much voltage is dangerous depends on how much total resistance is in the circuit to oppose the flow of electrons.

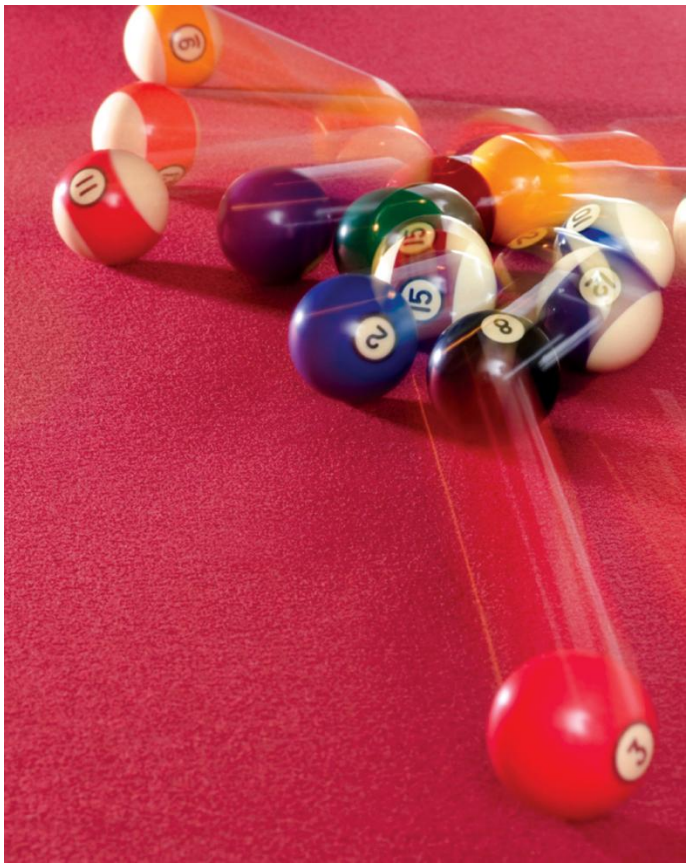

Body resistance is not a fixed quantity. It varies from person to person and from time to time. There's even a body fat measurement technique based on a measurement of electrical resistance between a person's toes and fingers. Differing percentages of body fat give provide different resistances: just one variable affecting electrical resistance in the human body. In order for the technique to work accurately, the person must regulate their fluid intake for several hours prior to the test, indicating that body hydration is another factor impacting the body's electrical resistance.

Body resistance also varies depending on how contact is made with the skin: is it from hand-to-hand, hand-to-foot, foot-to-foot, hand-to-elbow, etc.? Sweat, being rich in salts and minerals, is an excellent conductor of electricity for being a liquid. So is blood, with its similarly high content of conductive chemicals. Thus, contact with a wire made by a sweaty hand or open wound will offer much less resistance to current than contact made by clean, dry skin.

Measuring electrical resistance with a sensitive meter, I measure approximately 1 million ohms of resistance (1 MΩ) between my two hands, holding on to the meter's metal probes between my fingers. The meter indicates less resistance when I squeeze the probes tightly and more resistance when I hold them loosely. Sitting here at my computer, typing these words, my hands are clean and dry. If I were working in some hot, dirty, industrial environment, the resistance between my hands would likely be much less, presenting less opposition to deadly current, and a greater threat of electrical shock.

But how much current is harmful? The answer to that question also depends on several factors. Individual body chemistry has a significant impact on how electric current affects an individual. Some people are highly sensitive to current, experiencing involuntary muscle contraction with shocks from static electricity. Others can draw large sparks from discharging static electricity and hardly feel it, much less experience a muscle spasm.

The Modern Automobile Electrical Systems can be broken down into three areas.

Electrical Generation:

The charging systems for the different manufactures are not covered in this program. Because charging systems are computer controlled and each manufacturer designs and builds them differently the subject is too big to be covered here, but the principles will be covered.

Electrical Storage:

Batteries are covered because a circuit isn't complete without one. Lead acid (flooded type) and AGM batteries both will be covered. Our test techniques are in depth, so they can be used for all batteries, even high voltage hybrid batteries.

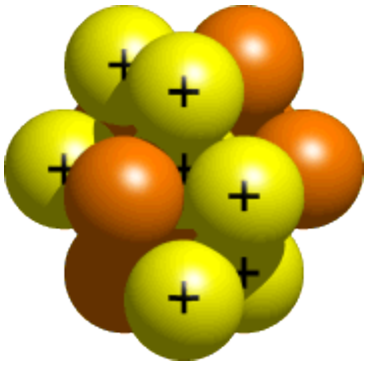

Electrical Distribution:

This is the main subject of the class. We need to understand how electricity flows through circuits. What makes electricity do what it does? And most importantly, how do we troubleshoot electrical problems in an automobile.

Very few technicians like to sit through a class about electrical theory only. Most want to know what to test and how to test it, so they can make repairs and get the vehicle out of the service bay. Understanding the movement of electrons in nanostructures is crucial to understanding properties such as electricity.

Look at the pool balls in motion. The result of one ball striking another ball sets off a set of predictable reactions if you understand billiards. That is because of forces that are acting upon them and the resistance each is moving against. This isn't unlike electrical laws and rules. Current flows because of force and resistance. Understanding the laws of electricity makes it easier to be a good troubleshooter.

Atomic theory

Niels Bohr discovered the planetary model of the atom. It isn't the only model of atoms that is used in the world of physics, but it works for technicians studying electricity. It offers a simplified representation of an object by depicting an atom. Although no one has ever seen an atom it helps when trying to understand what is going on in a conductor (wire).

The nucleus, the central part of the atom, is made from protons and neutrons. All of the atom's protons and neutrons go in the nucleus. The electrons orbit the nucleus. The actual orbits don't matter as much as having the right number of electrons.

No one has ever seen, touched, or smelled an atom. But we have found ways to measure them with DVOMs and DSOs. We have also discovered ways to get the atoms to do work for us in motors and light bulbs. What is really cool is that we have learned how to communicate through electricity. From Morse code to an electronic brake controller stopping a vehicle without any help from the driver are examples of using electricity to communicate. Yes; diagnosing a "U" Code or a Mass Air Flow Sensor is electrical troubleshooting.

Referring to this simple representation of the atom is the starting point to understanding electricity. Don't think that the electrons move like the simple image here shows us. They are following more of a 3-D path not all in a role like shown on the flat drawing. These paths are called shells. There are many types and shapes of shells but that is beyond the scope of this class.

You do need to understand that when you dump enough energy into the right atom you can get the electrons to pop out of the shell and move freely. The atom is now called an ION. An ION is an unbalanced atom with a net positive charge. The free electron has a net negative charge just like it had when it was part of the atom. When the free electron is part of the atom there charge is canceled out by thee positive charge and an atom has a net charge of zero. When an electron is pushed into another atom it becomes a negative ION. Another type of atom is an un-balanced atom which makes popping out free electrons easy.

GOT IT! Electrons and protons cancel each other out when they are each part of an atom. Energy can force the electron out of the atom and make it a free atom. The atom then is said to be positive and the electron remains negative.

Atoms don't like to be unbalanced so they grab the next free electron they can to balance themselves.

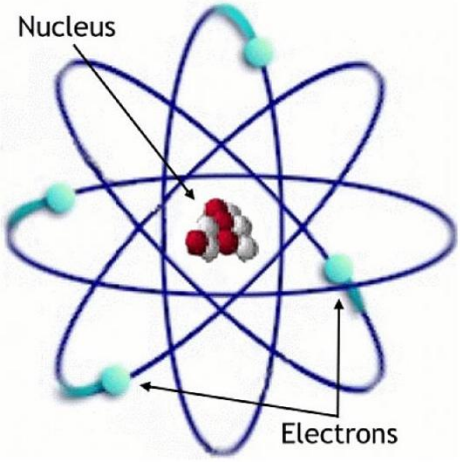

Atoms make up the elements as can be seen on the periodical table.

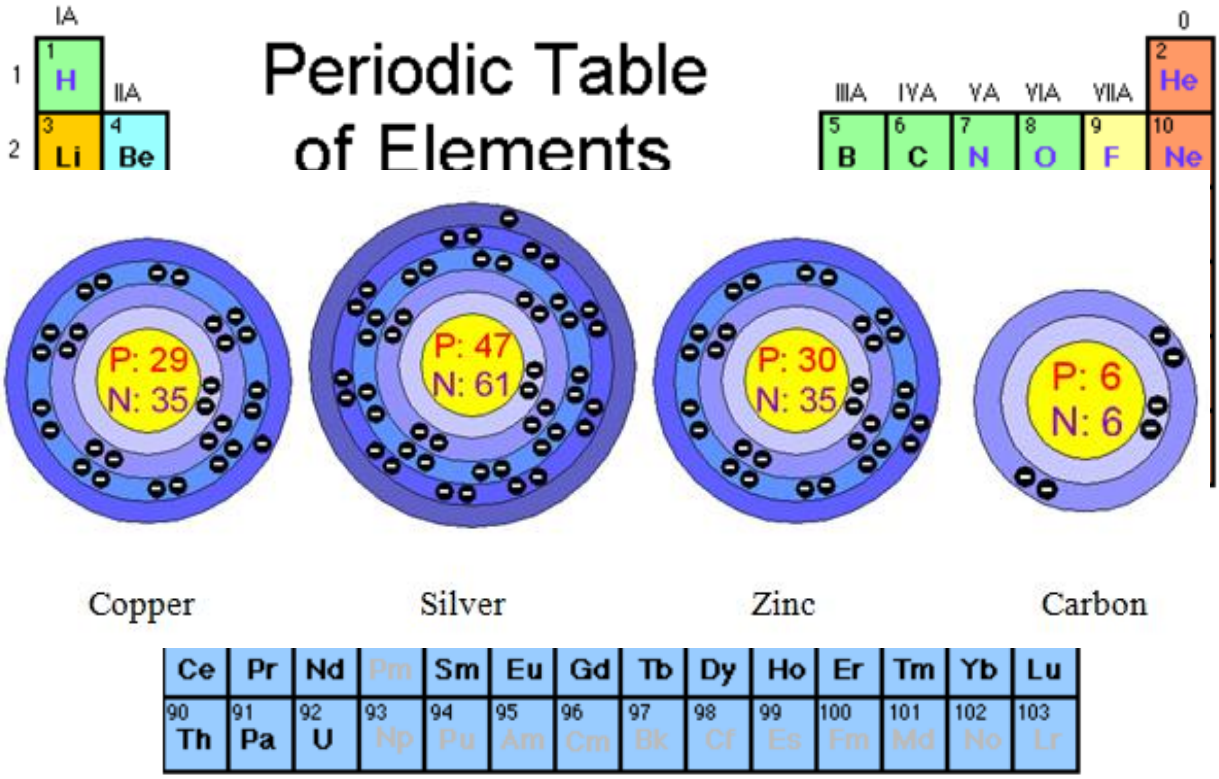

The atoms with few electrons in the outer orbit are the best conductors.

Silver is the beat conductor because its single electron is in the 5th valence ring, far from the nucleus. Copper is second with its single electron in the 4th valance ring. Silver has a problem with tarnish that causes problems with electrical contact. Insulators have a full valance ring with no free electrons.

Insulators

When the atom is a good insulator, like wood, rubber, glass, paper, Teflon, or the PVC material the electrons are stuck in their shells and won't come out for nothing. Electrical insulation is the opposite of conduction. Insulation is used to isolate electrical circuits to prevent short circuits.

Conductors

When an atom is a good conductor, like copper and other metals, the electrons are easy to dislodge from their orbit.

Conductors have the least opposition to current flow; there are some popular misconceptions;

- Silver is the best conductor. Many think gold is the best conductor, but not true.

- Gold doesn't oxidize like other silver and copper, which makes it popular for electrical connections. "Gold platted contacts" is a popular marketing claim.
- Silver oxide is referred to as tarnish.

Electrical Circuit Construction

Electrical circuits are created by connecting conductors to devices that require electrical power.

The circuits are isolated by insulators to prevent short circuits.

Surface contamination, especially surface oxide, must be expected on all conductors. These surface oxide films are insulators and must be broken down to achieve the metal-to-metal contact required for efficient electrical connections. Petrolatum, trade name Vaseline is the first used joint compound; it excludes moisture and prevents oxidation. NO-OX is the trade name for an improved joint compound that is frequently used for copper to copper connections. Gold does not require these special joint compounds. Electrical contact cleaner sometimes contains some NO-OX to maintain good electrical contact after cleaning.

Contact Diagnostics

Poor connections are a cause of circuit problems that must be identified.

- We will discuss special test techniques later to identify circuit problems.
- Connectors and splices in electrical circuits can cause failures.

Charge!

The force that causes electrical movement is the electrical charge. When we say positive or negative, we should add the word ***charge*** behind it

A fundamental property of a charge is;

Like charges repel each other

Opposite charges attract each other

When a free electron moves next to another free electron they push each other away.

(Hypothetical) Electron Pump

When a meter is connected to the either end and what you see being measured is the difference between the two ends of the electron pump. In an electrical conductor (wire) the meter measures the potential difference between the charges (2 ends of the conductor). Remember that this is a hypothetical example. In any automotive application the electron pump would be the battery or

charging system. What is important to see is the meter (DVOM) is connected to measure the potential difference. When making this measurement on a real circuit the positive (red) lead would be connected to the battery (power) side and the negative (black) lead to ground.

Engine cooling Fan Example

In this partial schematic of an engine cooling fan we see the same potential difference between the positively charged side and the negatively charged side. Both the motor and the resistor are simple (series) circuits. One side has a positive charge and the other side has the negative charge. The electron pump in this circuit is the vehicle's battery. The location of the measurement makes it a voltage measurement. Measuring the movement of these charges is what is called a current measurement. We will discuss more about voltage and current measurements later in the program. For now it is important to recognize that we are measuring the potential difference of the charges that produces current flow.

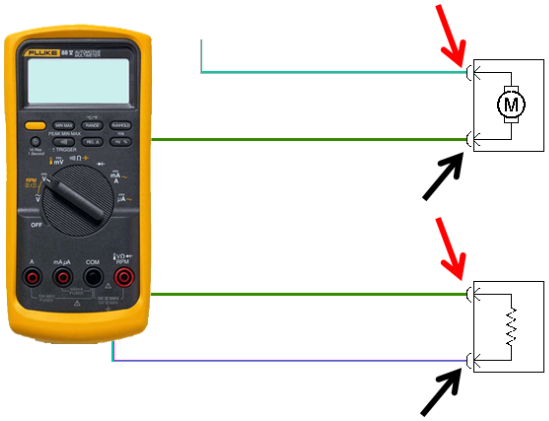

Battery, the Electron Pump

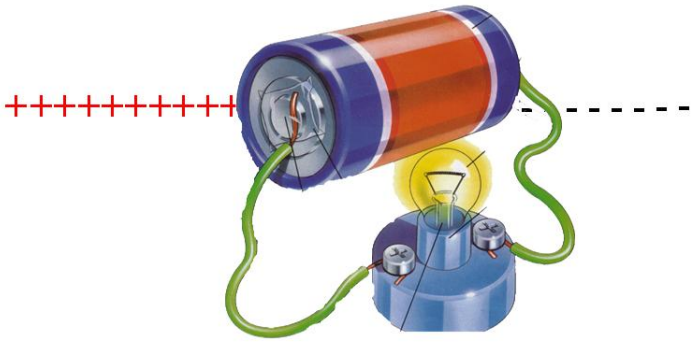

Let's replace the pump with a battery and add a lamp to the ends of the conductor. The addition of the battery, conductors, and lamp has created a circuit, more on that later. What is happening now is the charges are moving through the circuit. Remember that like charges repel and opposites attract. Go back to the free electrons and how they push one another because they are like charges (negative). The electrons are being pushed through the lamp and they heat up the filament to make it glow.

If you stop turning the electron pump (the battery discharges), the potential difference across the bulb disappears and the charges stop moving. There are other reasons the charges would stop moving and we will discuss that latter. Opens and shorts will be discussed in diagnostics (troubling shooting). The movement of the charges is called current.

Magnetism and Current Flow

When the charges move through a conductor there is an invisible electromagnetic field created around the conductor. This electromagnetic field is important in electrical studies and we will have more about it later. Don't panic with the constant; "we'll discuss it later" statements. You

can't explain everything at once, so things must be moved around. At the end of this discussion you have the information you need to understand and work with electricity.

Magnetic Field about a Wire

- A current passing through a wire creates a magnetic field that proportional to the amount of current flowing
- The thumb points in the direction of current flow, the fingers point in the direction of magnetic field.

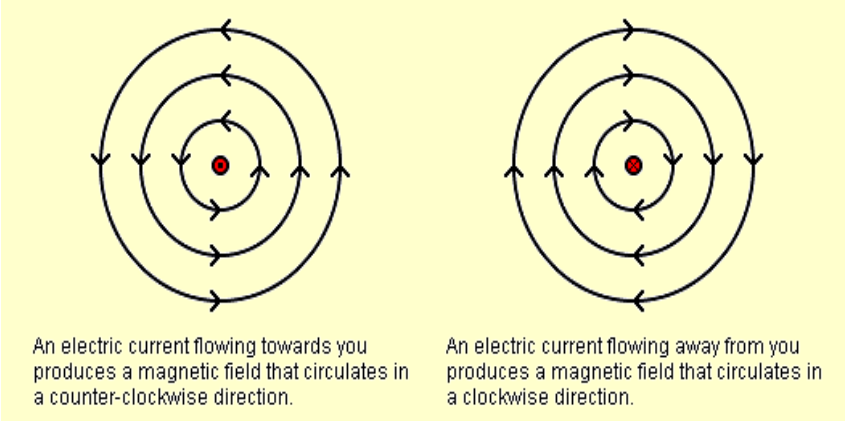

We use the weak magnetic field around a wire to measure current flow in the wire. Inductive amps probes measure the magnetic field and convert the results into amp readings.

Water Pressure Analogy



It can be helpful to use a water analogy to "see" electricity. Water towers are tall to provide pressure. There is a potential difference between the water in the tower and at ground level, this is voltage in electricity. The amount of water flowing is current.

A water tower is a simple device. Water towers come in all shapes and sizes; they all do the same thing: A water tower is simply a large, elevated tank of water. The tower in our example is about 165 feet tall.

Water towers are tall to provide pressure. Each foot of height provides 0.43 PSI (pounds per square Inch) of pressure. The 165 foot example produces just over 70 PSI of water pressure. The water tower must be tall enough to supply that level of pressure to all of the houses and businesses in the area of the tower. A water tower's tank is normally quite large. A normal in-ground swimming pool in

someone's backyard might hold something like 20,000 or 30,000 gallons (that's a lot of water!), and a typical water tower might hold 50 times that amount!

The water analogy helps to grasp the concept of electricity. Keep in mind that that these charges and their movement creates a magnetic field and water doesn't. The concept to grasp is that water pressure or electrical pressure only has flow when there is a complete circuit.

The speed of electricity:

In our lamp circuit as soon as the battery is connected the bulb starts to glow, there is no time lag. This will happen even if the wires are long like the lamps on a Semi-Tractor trailer. The effect is immediate; as soon as the switch is closed the lamps illuminate.

Pulleys require a loop

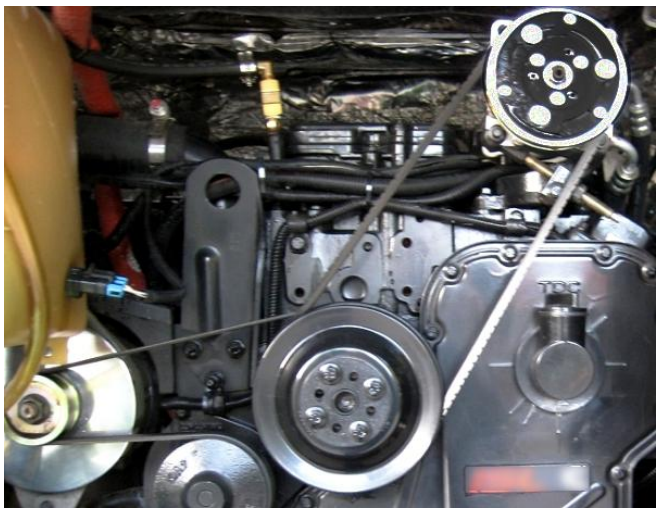

Pulleys turn when a belt on a loop transfers rotational torque from a drive pulley. In electricity charges are moving transferring power from one location to another. In the pulley system, one pulley transfers power from one to another. Even with a long distance between the pulleys, when one begins to move so does the other? The same thing stated about electricity is true; the effect is immediate. Just as in an electrical circuit, all the pulleys move at the same time, even if the belt isn't a straight line. It is because the belt fills the space between the pulleys and if any part of it moves the entire belt moves. Because the conductor has electrons, if one electron moves they all move. The belt transmits the work to the pulleys and the electrons transmit the work to the lamp. The belt is a loop as is the electrical circuit. The belt isn't used up and the electrons aren't used either.

Test Equipment

- Digital Volt Ohm Meter (DVOM)
- Low amp current probe
- Digital Storage Scope (DSO) AKA, Lab Scope
- Scan Tool
- Power Probe

Test equipment is a must have when diagnosing electrical problems. It needs to be easy to use and supply accurate test results. A Digital Volt Ohm Meter (DVOM), Low amp current probe, Digital Storage Scope (DSO) also known as Lab Scope, and even a Scan Tool will help with diagnoses. There are different pieces of equipment available to make the job easier. The Power Probe is one such tool. There is a special section on it in the manual. We do not sell the tool. Our interest in adding it to the class is to help technicians know what is out here to make the job easier.

Digital Volt Ohm Meter (DVOM)

The Digital Multimeter (DMM) is a device that can test several different electrical parameters. The most common is voltage, ohms, and amps. The meter needs to be both precise and accurate. Precision and accuracy is not the same thing.

Precision is the fineness to which a measurement can be made. As an example, if someone says it is between 50° F and 70° F outside you know their statement isn't very precise. It may be accurate but not precise. If you are told it is 62.75° F, you know precisely what the temperature is. If you are told it is 90° F outside and it is 62.75° F, the statement isn't accurate. If temperature is critical, you have a problem.

For a meter to measure 3 digits to the right of the decimal point, it must have an accuracy of around a thousandth of a volt. If it doesn't, the readings won't mean much.

The major difference between DVOMs is the precision and accuracy in which they are made. Low cost manufacturers don't insist on the precision and accuracy of their meters. If you have a meter that doesn't have the precision and accuracy of a higher quality meter it is important to understand its limitations when testing. How much precision and accuracy do we need? Most things break in a big way and not in a subtle way. When you are dealing with a calibration problem on an important load sensor you will need precision and accuracy in your meter. When shopping for a DVOM look for precision and accuracy and automotive functions.

Digital Storage Scopes (DSO)

Digital Storage Scopes (DSO) is a device that can generate a graph of voltage over time. The signal can be viewed as it changes amplitude or states. It isn't used for precision or accuracy unless it has cursors and you use them. Most DSOs have cursors to get a precise measured value, if the operator uses them. If a signal isn't moving use a DVOM for its precision and accuracy. If the signal is moving in amplitude or it is changing states from high to low several times a second use a DSO. One great feature is that the signal can be recorded and played back. This allows you to operate the vehicle safety while testing. As with the DVOM, when shopping for a DSO, look for features like glitch capture and recording capabilities.

Don’t get too concerned about the sampling rate. Of course you need a DSO with a good sampling rate but why pay for more than you need. Digital sampling or digitizing is where a voltage is sampled, or measured, than plotted to the screen. The signal doesn’t freeze in time in between the sample, so a glitch could be missed. To avoid missing anything, sampling can be millions of times per second. If not enough samples are taken, then when the waveform is reconstructed (dots placed on the screen) from the digital samples, the resulting waveform will possess a lower frequency than the original. This is known as aliasing. Most modern DSOs have very little aliasing to be concerned about. Something to remember is that the DSO will collect the data at the speed it is designed for but, it updates the screen at a much slower rate. LCD screens do not respond very fast.

Scan Tool

Scan tool data can also be used to collect electrical information that may be used for diagnostics. The best example is vehicle system voltage which is battery and charging voltage. Most technicians will look to see if the vehicle has any diagnostic trouble before they do anything else. While you are there with the scan tool in your hands; why not look at data? Sensor signals are sent through the computers and to the scan tool and can be viewed by the technician. A signal may be sent to a computer on the communication BUSS, and the computer will send it to the scan data circuit. A lot of different things could go wrong on its trip. Always verify data with a DVOM or DSO if it isn’t correct.

Let’s get technical

There are laws and statements about electricity that should be covered. Many of which aren’t required knowledge when diagnosing a problem. That doesn’t matter, what does matter is that technicians study for different reasons and some want to “really know” this stuff. Even if you don’t remember the names of the laws it is a good thing to know about them to gain a deeper understanding of the subject.

What are we going to Measure?

Ohms law describes the relationship between Electromotive force, Current, and resistance in a circuit. These are the main properties of electricity as it moves through a circuit. And that is what has to be measured. We have all seen Ohms Law in one form or another and may have attempted to work with it in the past. Do you want to understand and be able to diagnose electrical faults? Then let’s break down Ohms Law into something to use in the service bay.

There are three basic components of electricity that we can measure.

Electromotive force (emf) is the Electric potential difference. The potential difference is between 2 points in a circuit. The Unit of measurement is Voltage which is Voltage is measured with a voltmeter. There are two basic ways to measure voltage. Measure voltage available and the voltage Drop across resistance (Voltage used up forcing electrons through resistance).

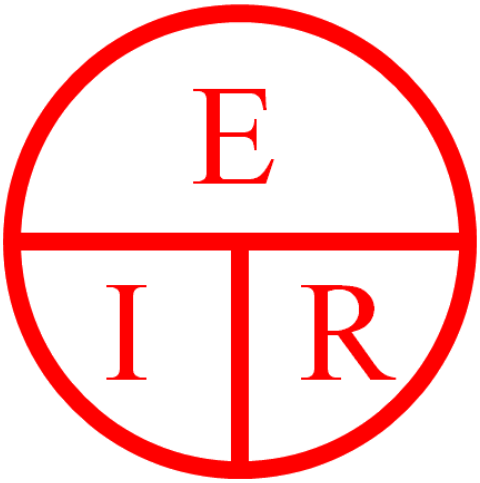

Electromotive force or electrical pressure is the electric force attracting and repelling electrons in the material. It can be represented with a V for voltage or E for emf. The emf propels the electrons (current) through resistance. EMF can be positive with respect to one point in the circuit while negative with respect to another point. Measuring voltage is entirely relative to the potential difference in a circuit. The spot to select to measure voltage is a critical part of electrical diagnostics.

Resistance is opposition to current flow. Resistance opposes the current moving through a conductor or circuit, limiting the current flow. Resistance has no polarity just as a kink in a hose causes a drop in pressure regardless of the direction the water is flowing in. Resistance is atomic friction and the power loss it in the circuit is converted into heat energy. Resistance is temperature dependent (Increases with increased temperature in many substances). The unit of measurement is Ohms and it is measured with an ohmmeter. It is represented by the Greek letter omega Ω.

Amp is a term used to describe the number of electrons moving past a fixed point in a conductor in one second. Current is what does the work in an electrical circuit. It can be called the quantity of electricity because current is the flow of electrical charges through a circuit. The unit of measurement is amperage (amps) which is the volume of the electrical charges. EMF is the force that drives the current through the circuit.

Corrosion is unintended resistance. A motor for example is the intended resistance in the circuit, the voltage applied will cause the motor top run. Corrosion in the circuit in unintended resistance that causes a voltage drop to the motor which will reduce current flow and the motor will not operate properly.

The oxidization in this connector will rob the motor of power, which means the applied voltage is reduced by the voltage drop caused by the corrision.



The function of the wiring and connectors is to deliver voltage to the device to be powered with minimum loss. Technicians must locate circuit problems that add unintended resistance. The question is how determine the effect of the additional circuit resistance.

Ohm's Law:

Electromotive force, resistance, and current have an unchangeable relationship. After all it's a Law. Ohm's Law explains the relationship using formulas.

Ohm's law states that the current between two points in a circuit is directly proportional to the potential difference (voltage) across the two points, and inversely proportional to the resistance between the two points.

The mathematical equation that describes this relationship is: $\mathbf{I = E/R}$

I is the current through the conductor in units of amperes,

E is the potential difference measured *across* the conductor in units of volts, and

R is the resistance of the conductor in units of ohms.

More specifically, Ohm's law states that the *R* in this relation is constant, independent of the current.

The law was named after the German physicist George Ohm, who, in a paper published in 1827, described measurements of applied voltage and current through simple electrical circuits containing various lengths of wire. He presented a slightly more complex equation than the one above to explain his experimental results. The above equation is the modern form of Ohm's law.

In physics, the term *Ohm's law* is also used to refer to various generalizations of the law originally formulated by Ohm.

Ohm's first equation is typically expressed as E=I X R or voltage, E, equals current, I, times resistance, R, meaning that if you know the current flow through a circuit and you know the

resistance of the circuit, you can calculate the voltage applied to the circuit. Try to remember this part of Ohm's law as it directly pertains to the tests we will be performing later in the course.

A triangle or a pie can be used to display Ohms Law. This representation of Ohm's law places the electrical values in their mathematically correct positions for calculating EMF, R, or I. A value over another value, such as E/I, actually means E divided by I. where two values that are side-by-side in the pie means to multiply the two.

Don't get crazy, most of us don't remember the circle when we need it. Why not take the:

To find Voltage

$$E = I \times R$$

To find Current

$$I = E \div R$$

To find Resistance

$$R = E \div I$$

Write it on a piece of paper and put it with your other tools? The "symbol" given for each quantity is the standard alphabetical letter used to represent that quantity in an algebraic equation. Standardized letters like these are common in the disciplines of physics and engineering, and are internationally recognized.

Applying Ohm's Law to a real word circuit isn't that difficult. Look at this schematic of a license plate lamp. If we measure current flow near the lamp in question we can use Ohm's Law. Measuring current flow is in fact using Ohm's Law. I = E ÷ R, is what the Law is about. In our example, if current is normal, the E (voltage) and R (resistance) must be correct. One test procedure and three answers, you can't beat that. Thank you, Ohm's Law. When a technician is measuring current, he isn't thinking in Ohm's Law equations. He is thinking, what the current in this circuit is, it's the same thing.

This diagram is for a system where the battery negative terminal is connected the chassis ground. B+ is supplied to 4 circuits; we can use ohm's law to calculate resistance by measuring voltage and current.

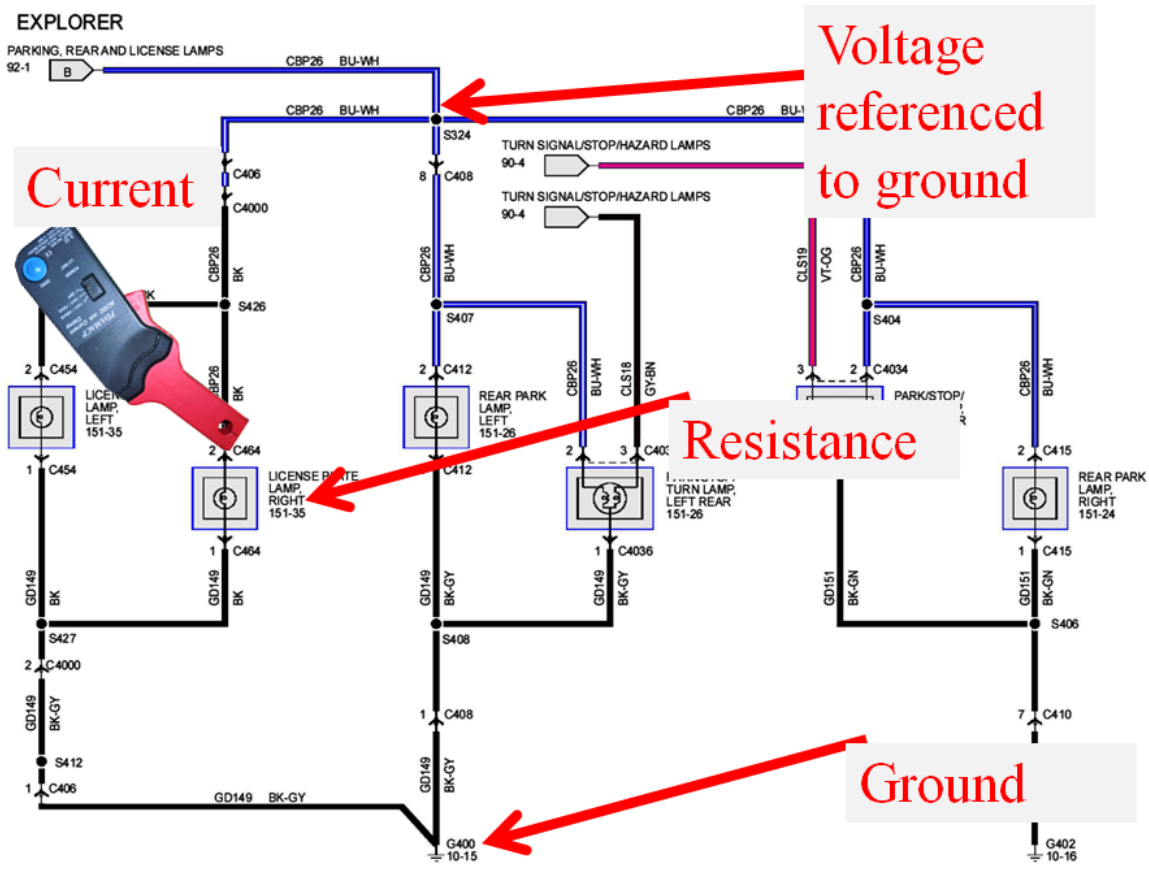

This is a real world example of circuits we find on vehicles. We will be using real diagrams to discuss real world diagnostics in this program.

Diagnostic Logic

- The diagnostic process starts with a diagnostic direction
    - Identify performance problems to start a diagnosis
        - Do all lamps illuminate properly
        - Does a MAF indicate normal values
        - Does a temperature sensor indicate the correct temperature
    - Verify B+ and ground to the device
    - Get a complete picture of operating conditions

Diagnostics is a process or identifying a problem area, then pin pointing the exact cause of the problem. Identifying a performance problem is helped with diagnostic trouble codes, but

can be more complex at times. The next example is simple, do the rear lights illuminate properly?

Identify Performance Problem

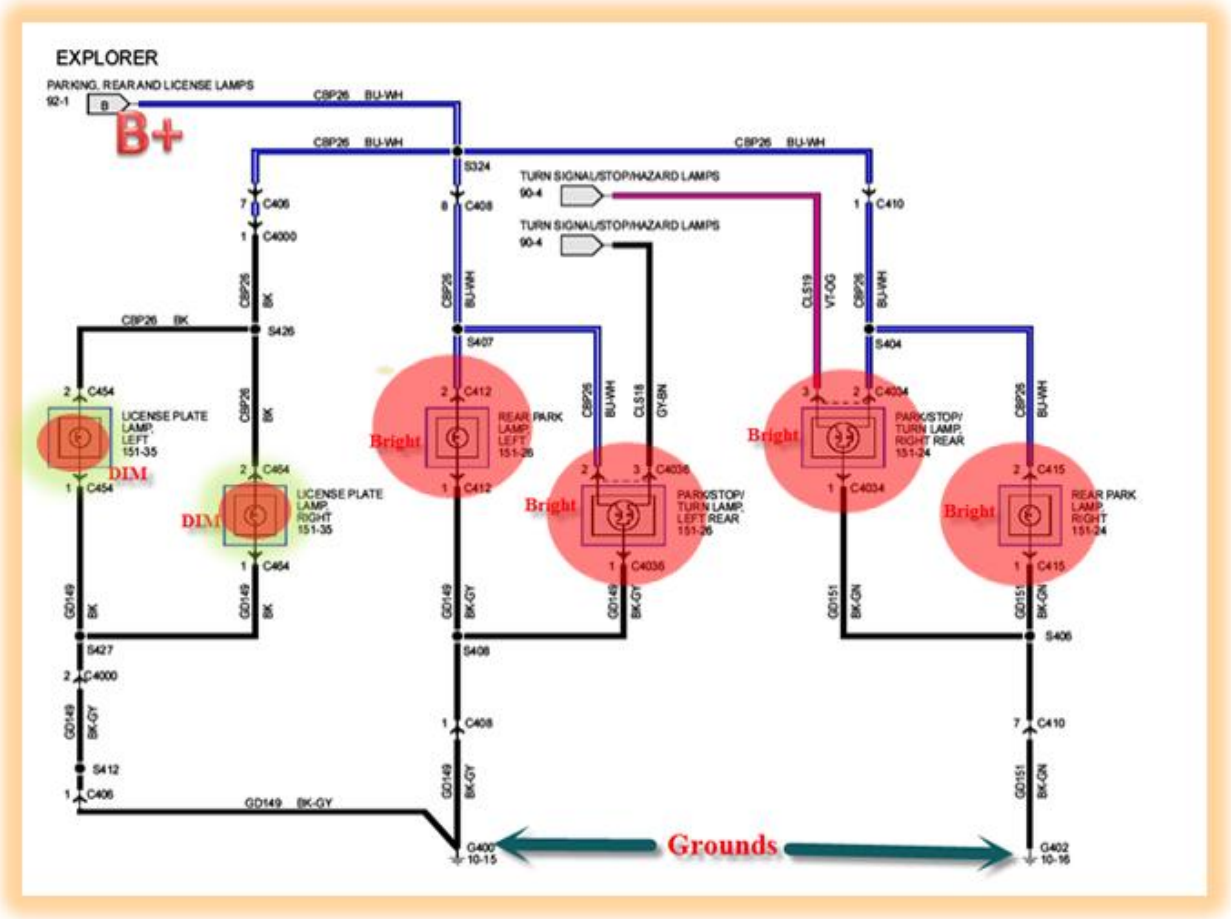

Study the operation of the lamps to identify the problem area. Two tag lamps are dim indicating a problem. We will go deeper into circuit analysis after we discuss circuit in more detail.

- We have gotten a diagnostic direction for a simple problem; next we are will look at circuits operation and issuers before we go further with our diagnostics

Circuit Analysis

A circuit is an unbroken path which an electric current is able to flow. There are two general circuit classifications, the Series and the Parallel circuits.

In a series circuit there is one part for current to flow. A parallel circuit there is more than on path for current to flow though.

There won't be any current flow if there aren't any conductors connected together in a circuit. Conductors carry the electrons and a complete circuit supplies a path for them to flow in. The circuit is connected to from the source to the destination or destinations. The devices or loads are the components where work is to be done. Just like the pulley, there is a continuous recirculation of the same electrons. If the circuit wasn't complete, we would need an endless quantity of electrons and somehow continuously feed them into the end of the circuit. Then we would need something to dump them into. By completing the circuit, making it a loop, we have the capability of supporting a continuous flow of electrons indefinitely without the need for infinite electron supplies and dumps. Having a complete circuit, all we need to do is maintain the EMF which is the electron pump. In the service bay that means ensuring there is good power (B+, voltage) and a good ground.

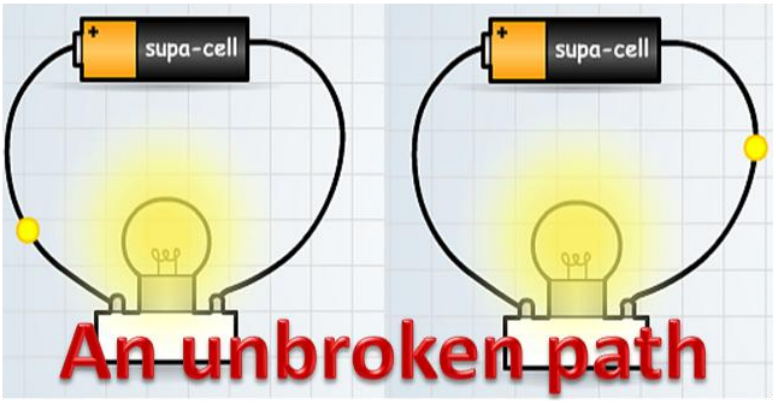

Let's introduce a new term, continuity; it is important in a circuit and a straight piece of wire. Just as in the example with the straight piece of wire between the electron Source and Destination, any break in this circuit will prevent electrons from flowing through it: The two things that are important with continuity is, to determine that there is in fact continuity as well as what is the continuity between. The circuit requires electrical continuity in the right places. There can be normal and abnormal continuity. Normal is continuity within the designed complete circuit. A complete circuit is from the supply source through the conductors, and components completing a ground path back to the supply source. Any break in the circuit and current flow stops, it doesn't matter where the break is. Breaks occur in conductors, switches, and components.

Polarity

That's why batteries must be installed correctly. This is a simple concept that tells us that the electrons flow in one direction. A circuit is designed with polarity in mind and shouldn't be altered.

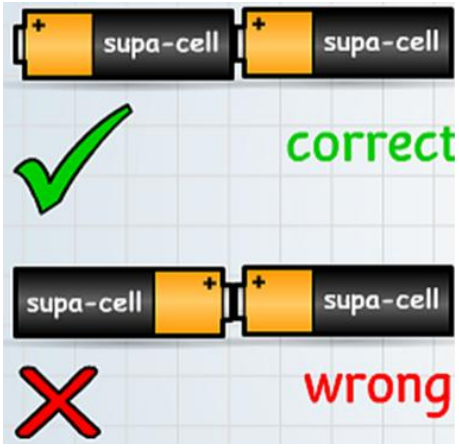

Automotive Circuits

The entire vehicle is part of an electrical circuit. With only one battery and one alternator all circuits are a part of the whole

Many circuits can have a problem that affects another circuit. But, not all circuits can affect other circuits. A vehicle specific schematic can help with knowing which ones will. Schematics are as much a part of electrical diagnoses as a DVOM or DSO.

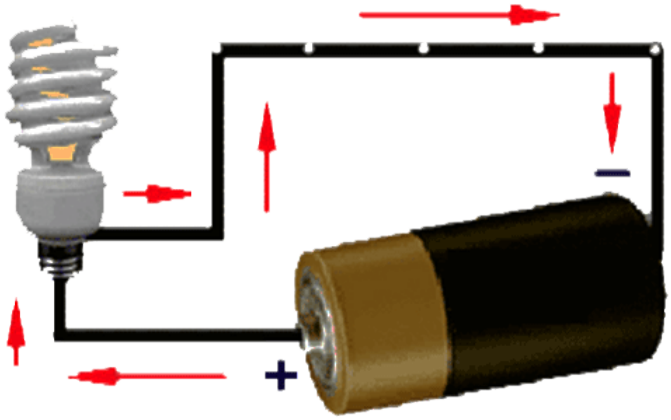

A circuit has three basic components;

Voltage (The Source)

Resistance (The Load)

Amperage (The Work)

This is part of a schematic for two backup lamps. When viewing one lamp it is a series or simple circuit. Because several lamps are powered by a common feed, it is part of a parallel circuit or a combination circuit.

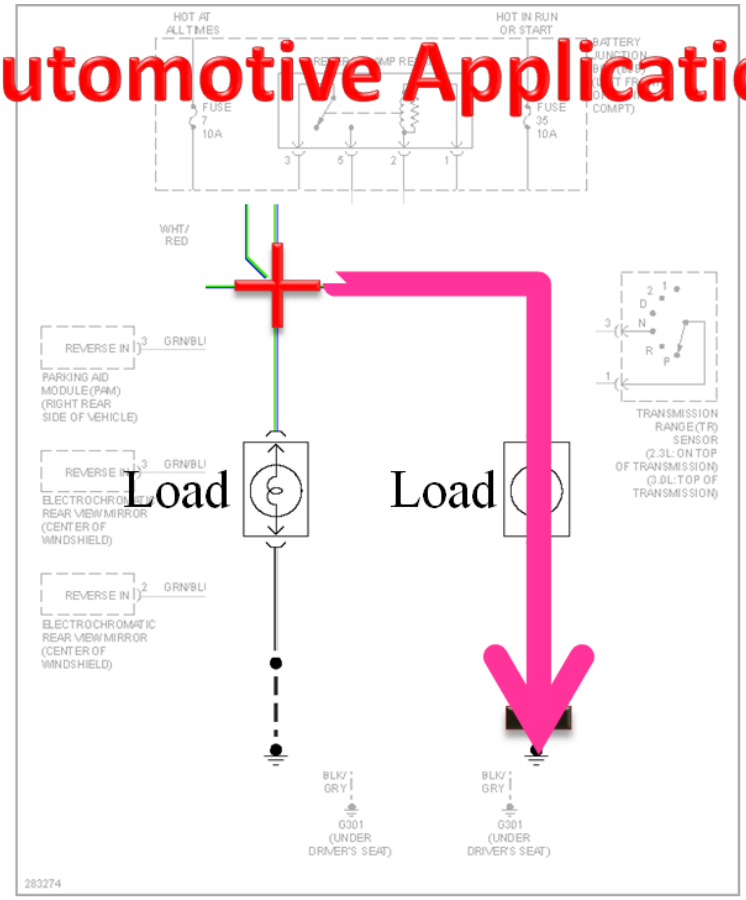

When diagnosing a circuit first look at the part that has the load or component. In the case of one of these lamps we can see the three basic components. The source (Voltage), the resistance (Load), and although we can't see it we could measure it, Current (The work being done). If there was an open circuit no work would be accomplished. Diagnostics of series and parallel circuits require an understanding of how they function.

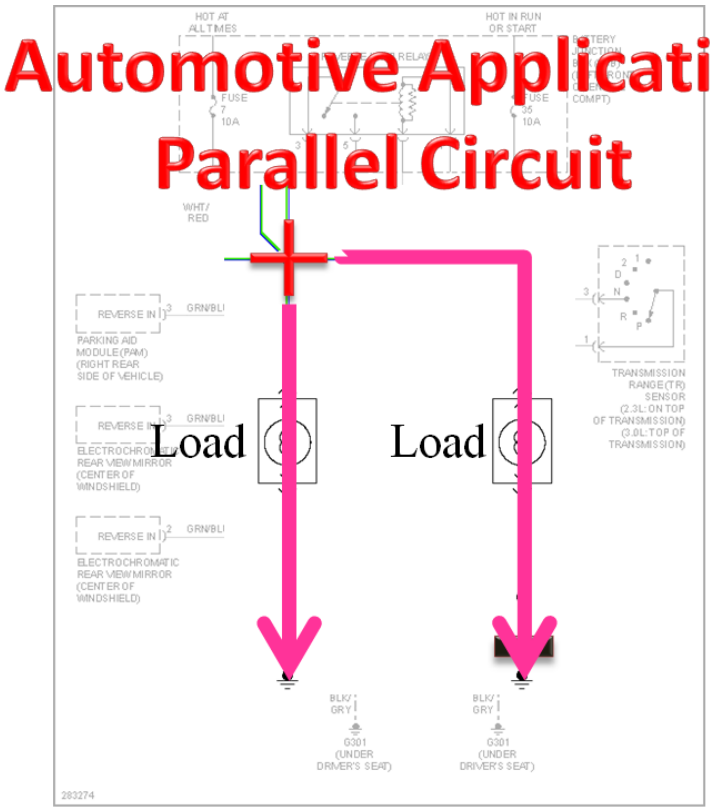

Parallel circuits share a common power source and/or ground. In this example both loads use ground G301 and the B+ supply.

Each branch has independent current flow determined by the B+ supply, load resistance and ground connection. Any problem with the common B+ or ground will impact both loads.

Series circuits have one path for current flow that is not shared with other circuits.

Series Circuit

Voltage is used to power current through the load resistance. In a simple series circuit with only one load most of the voltage is used up by it. Voltage drop is the term to describe voltage being used up by resistance. There will be enough voltage remaining on the ground side to push the current back to the source. Ground voltage can be low because there shouldn't be any resistance that would use up the voltage. The circuit can use a common ground. That means the source and the component are grounded to the engine. There isn't a wire between the two.

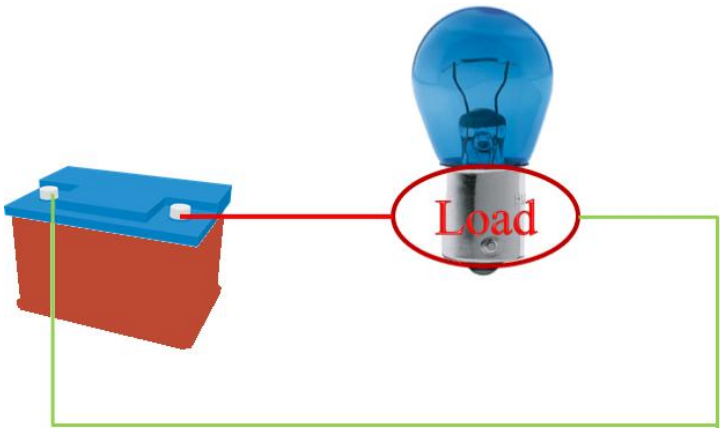

There are components that get their ground from a computer. In that system the computer is grounded to the engine as well as the body. That allows components to be grounded by either the engine or body.

All grounds end at the battery negative. Another way to say it is all good grounds depend on a clean and tight negative battery connection.

A vehicle specific schematic will show all of the grounds and how they are wired. We will spend time to understand diagnostics with automotive diagrams.

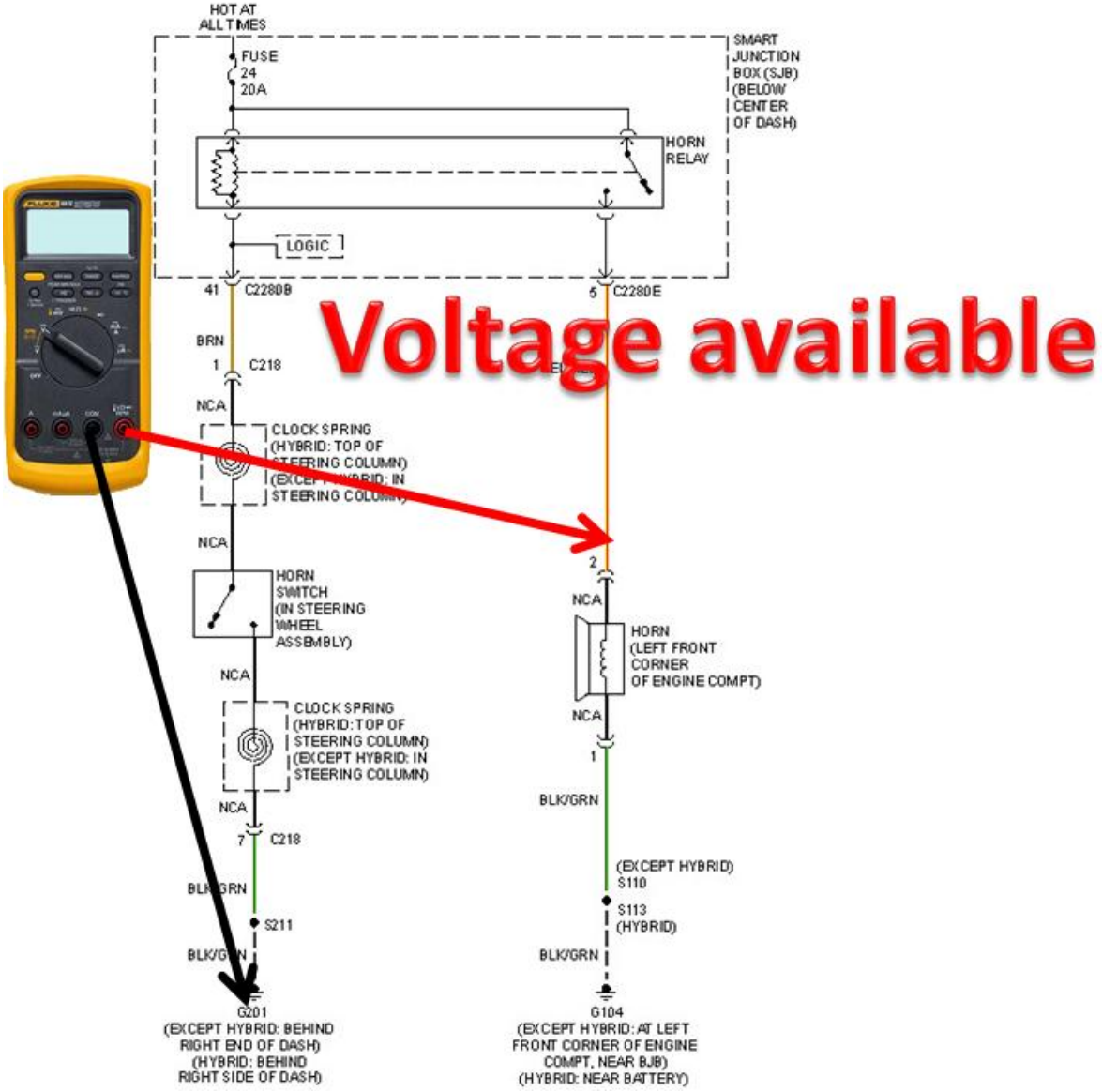

We will perform a diagnosis with this diagram later; this test is checking the voltage from the B+ side of the horn to ground.

Voltage drops

It helps to understand what is going on in circuits by understanding voltage drop. A voltage drop in an electrical circuit normally occurs when current is passed through the load. In electrical

engineering and the designing of electrical circuits the voltage drop of any circuit must be calculated. All a technician must do is measure it.

Measuring voltage drop

Use a voltmeter connected across the part of the circuit where you want to measure the voltage drop. The voltmeter will measure the potential difference the positive and negative leads.

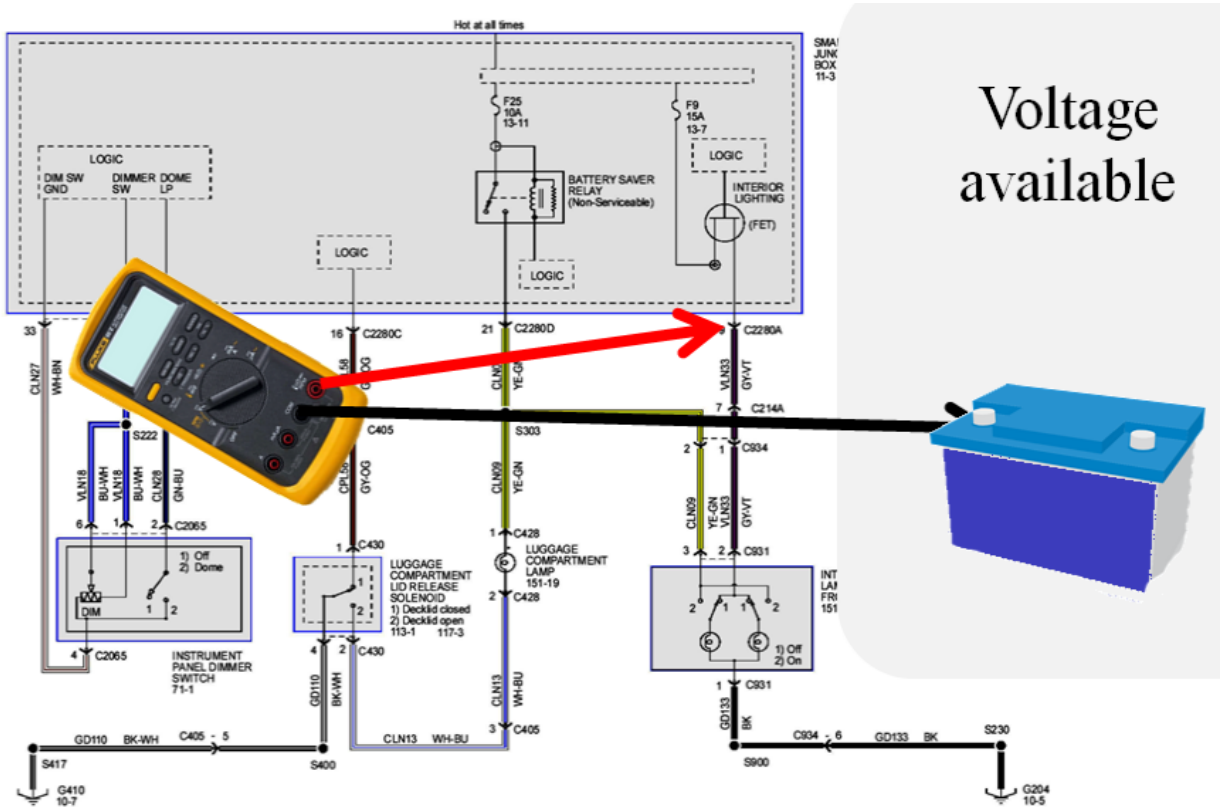

Later in class we will discuss voltage drop measurements across the ground circuits of different components, which are critical when diagnosing complex circuits. We will go into diagnosing all these examples later.

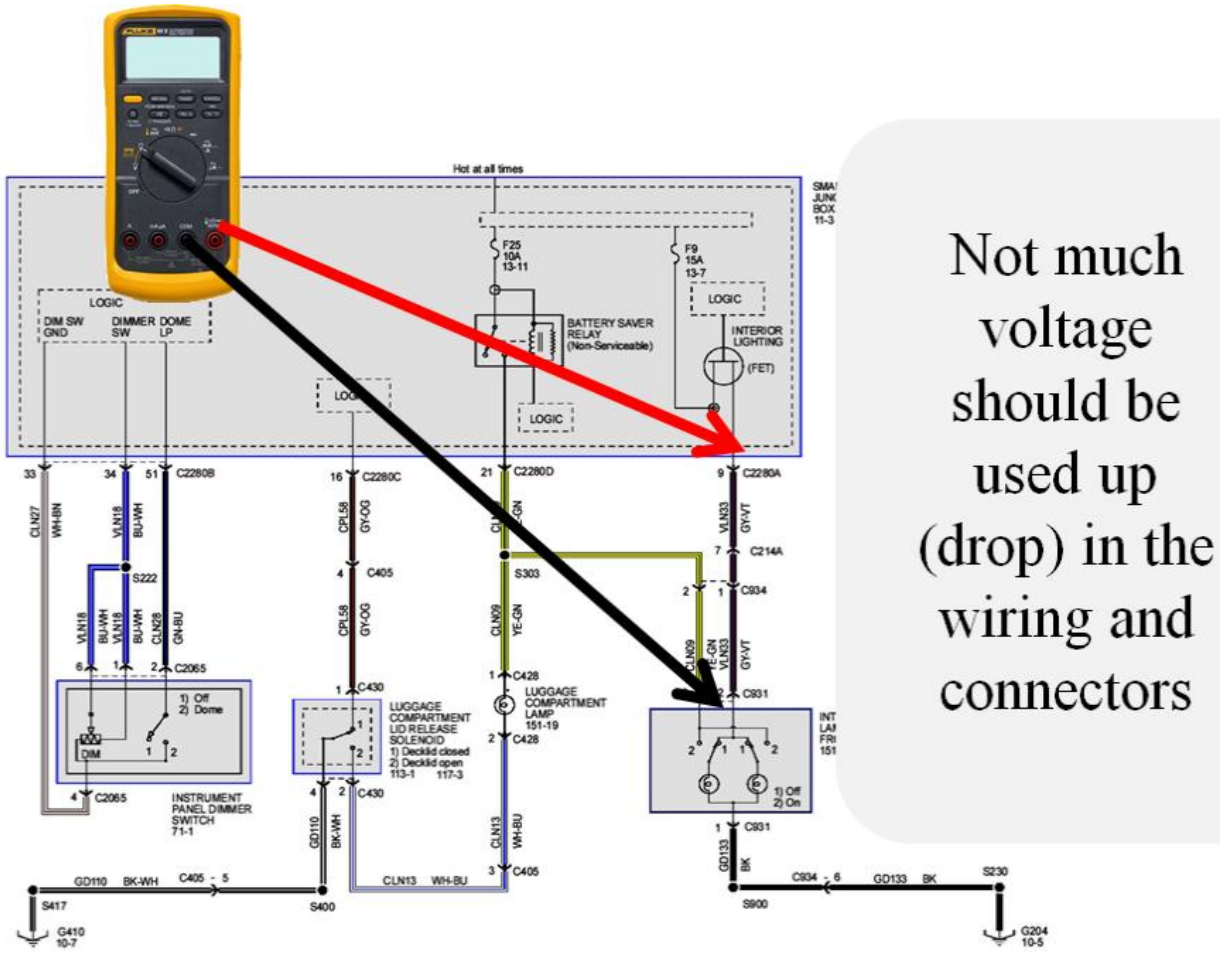

Wiring and connectors must provide a low resistance path. All wiring and connectors has some resistance, but it is small when compared to the load.

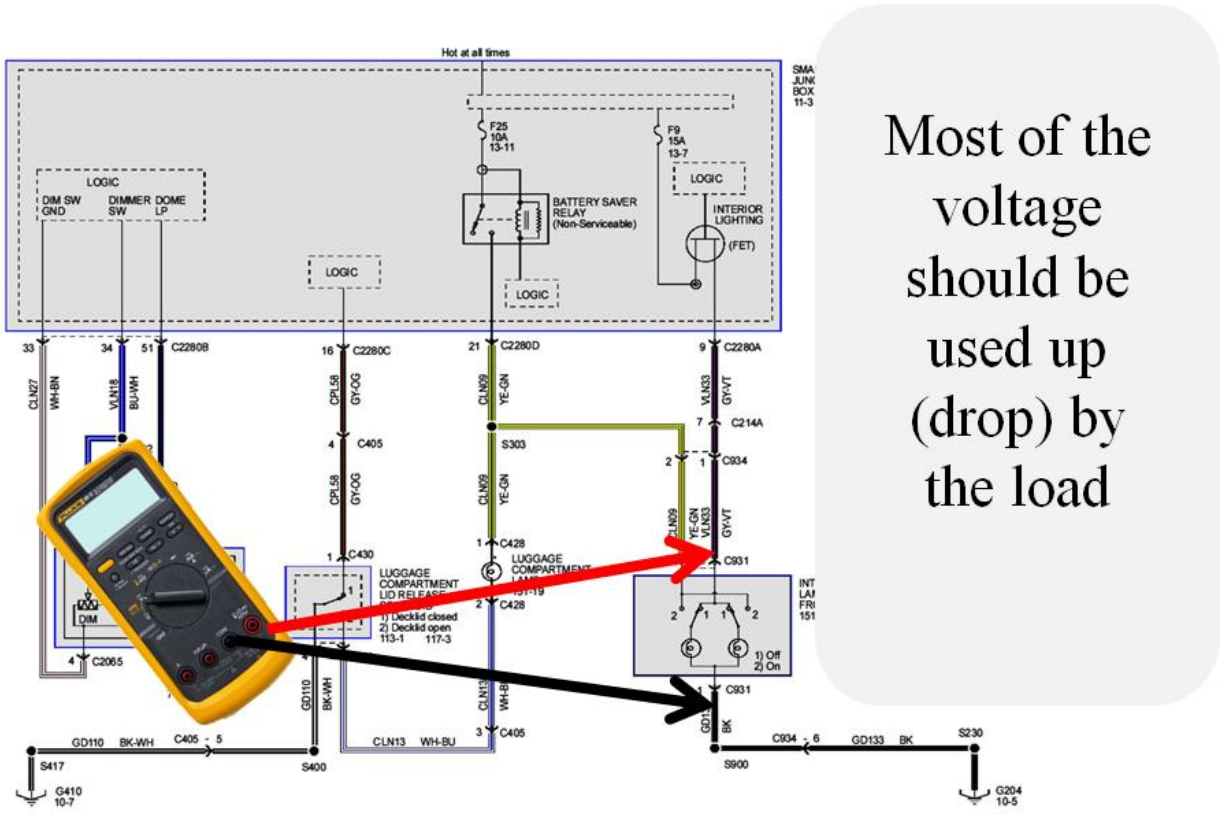

Any voltage drop in the wiring, connector or ground reduces that available voltage to the intended load, which impairs the performance of the device.

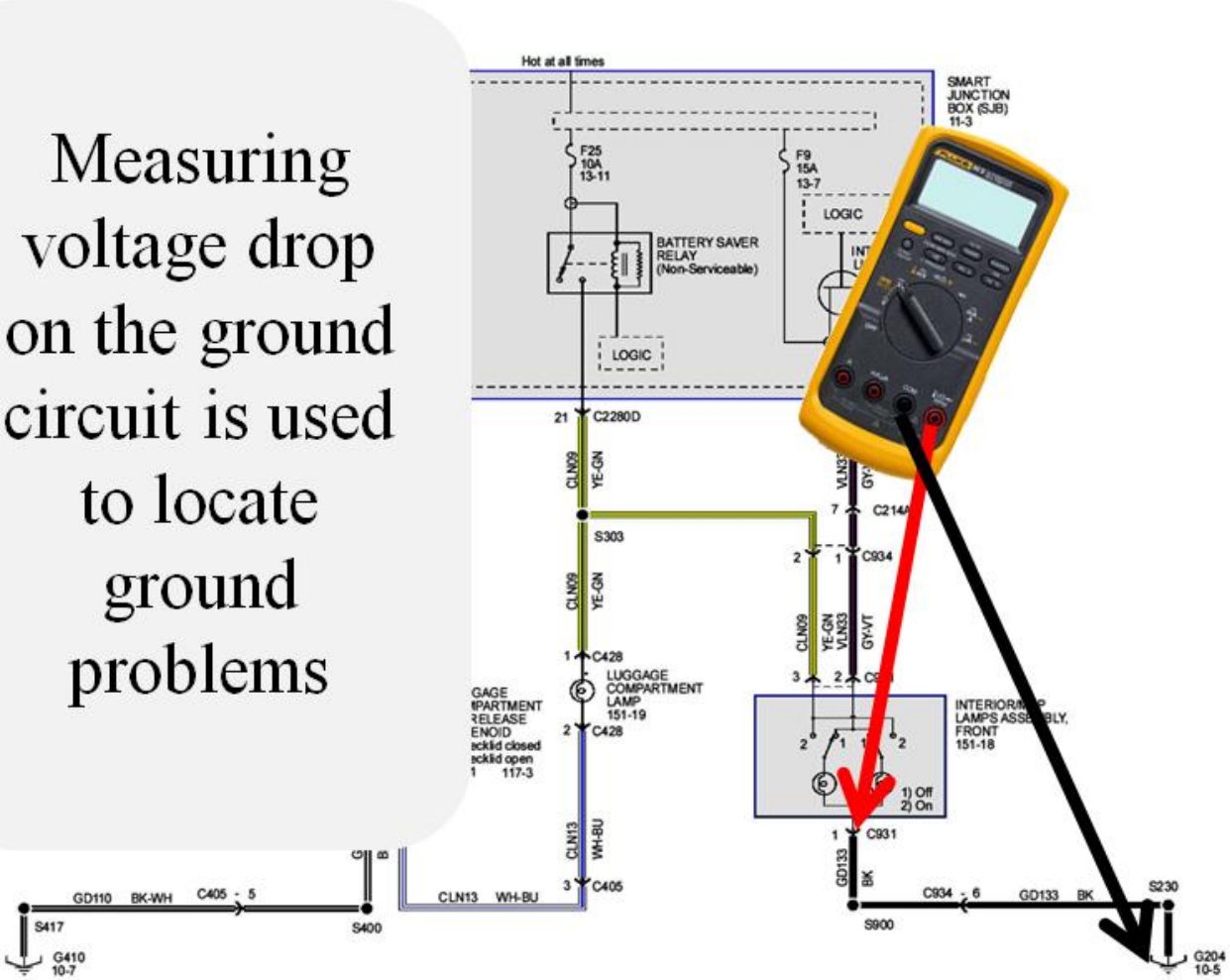

Grounds are problems when the wiring connection to ground makes poor contact with the metal chassis.

Series circuit current flow

In a series circuit the current stays the same and the voltage changes, because voltage is used up doing work. Current is the same going into or coming out of the series components. Which makes it is the same on the power side or the ground side. Voltage is dropped going through the component (load) so it will be less on the ground side of the circuit.

Current flow is determined by the circuit resistance and voltage available, if current is measured on the power or ground sides it **will** be the same. Ohm's Law states, I = E ÷ R, which means that I (current) is a result of voltage and resistance, current stays the same throughout the circuit. Voltage will be used up by doing work to flow current through the resistance.

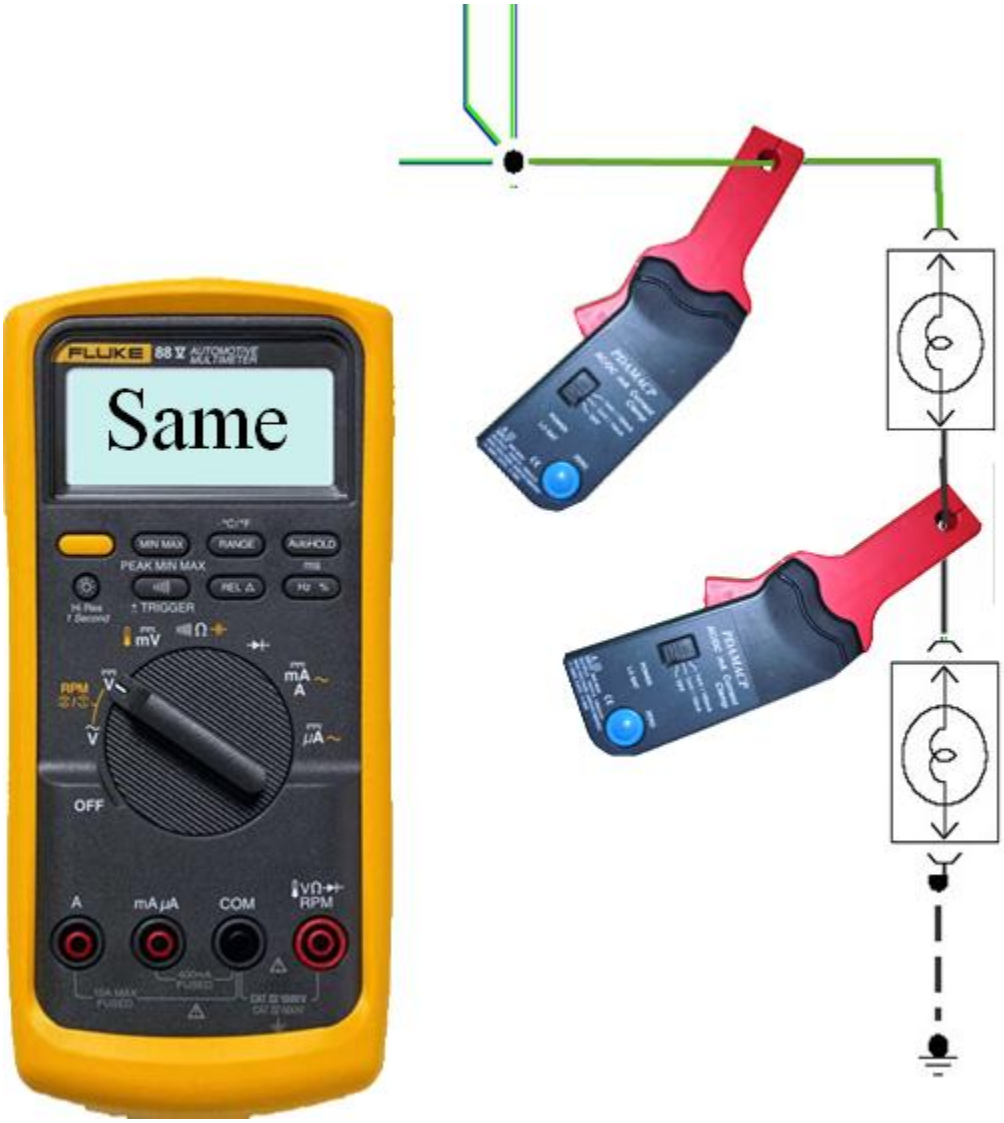

The current flow through the two loads is the same because of the single path for current flow.

Voltage Across series connected loads

This branch has two loads connected in series. This could be an example of two 6-volts lamps connected to a 12 volt circuit.

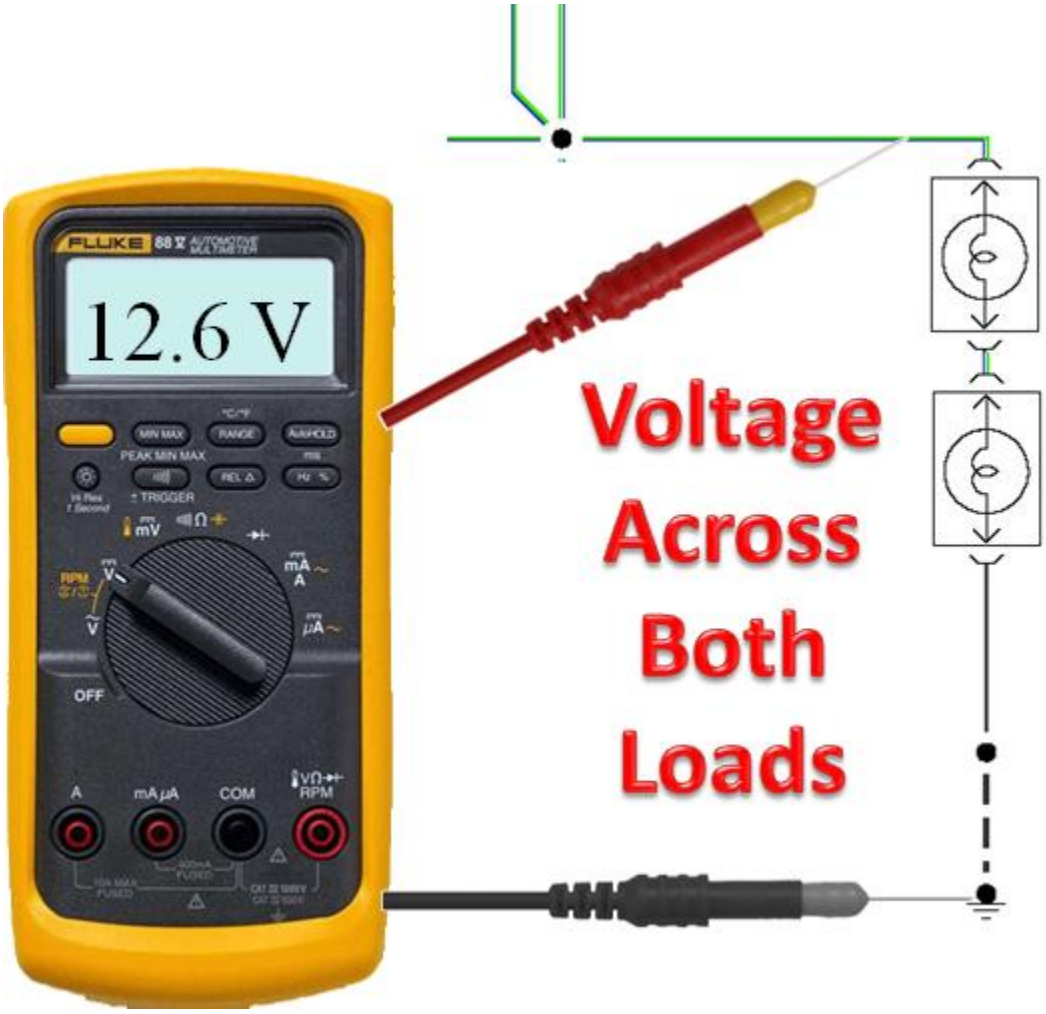

If the two lamps are identical, they will split the voltage with half the voltage dropped by each lamp.

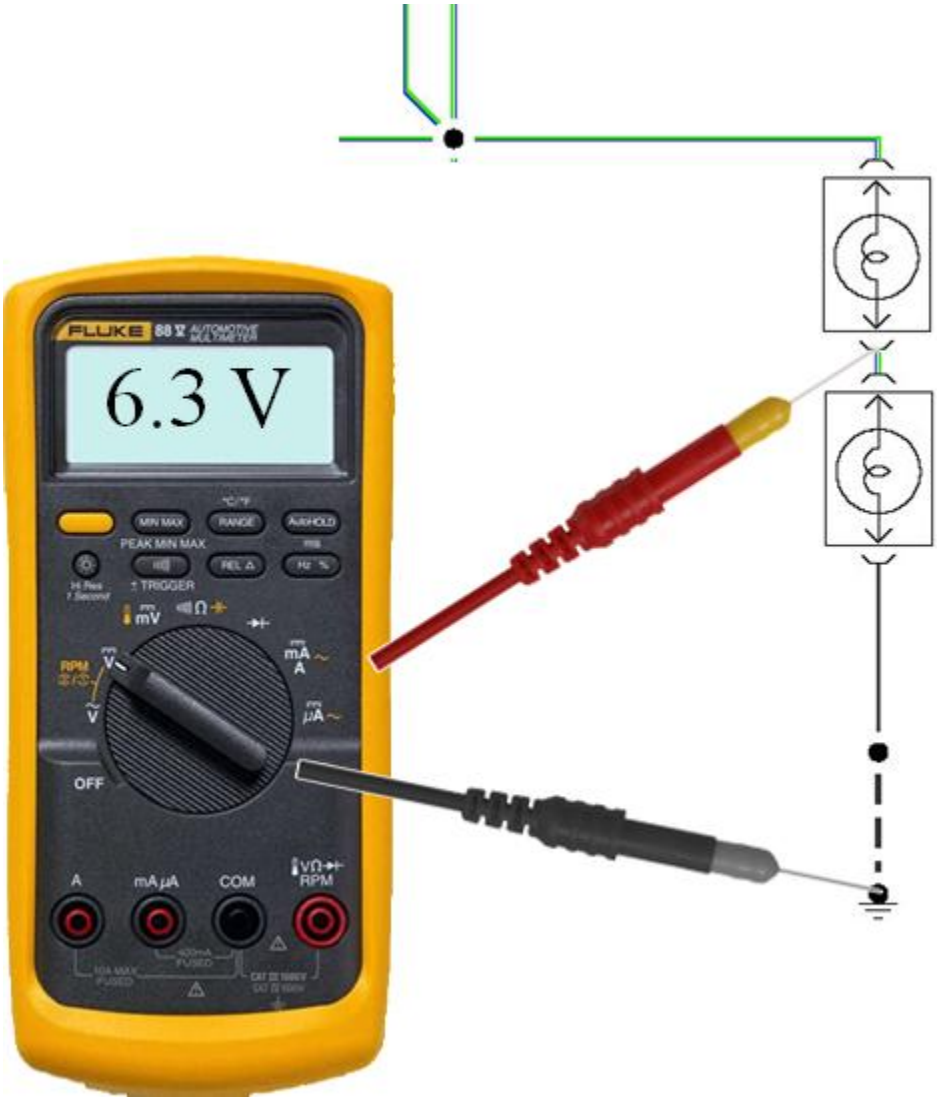

The first lamp has a 6.3 volt drop, leaving 6.3 volts for the second lamp.

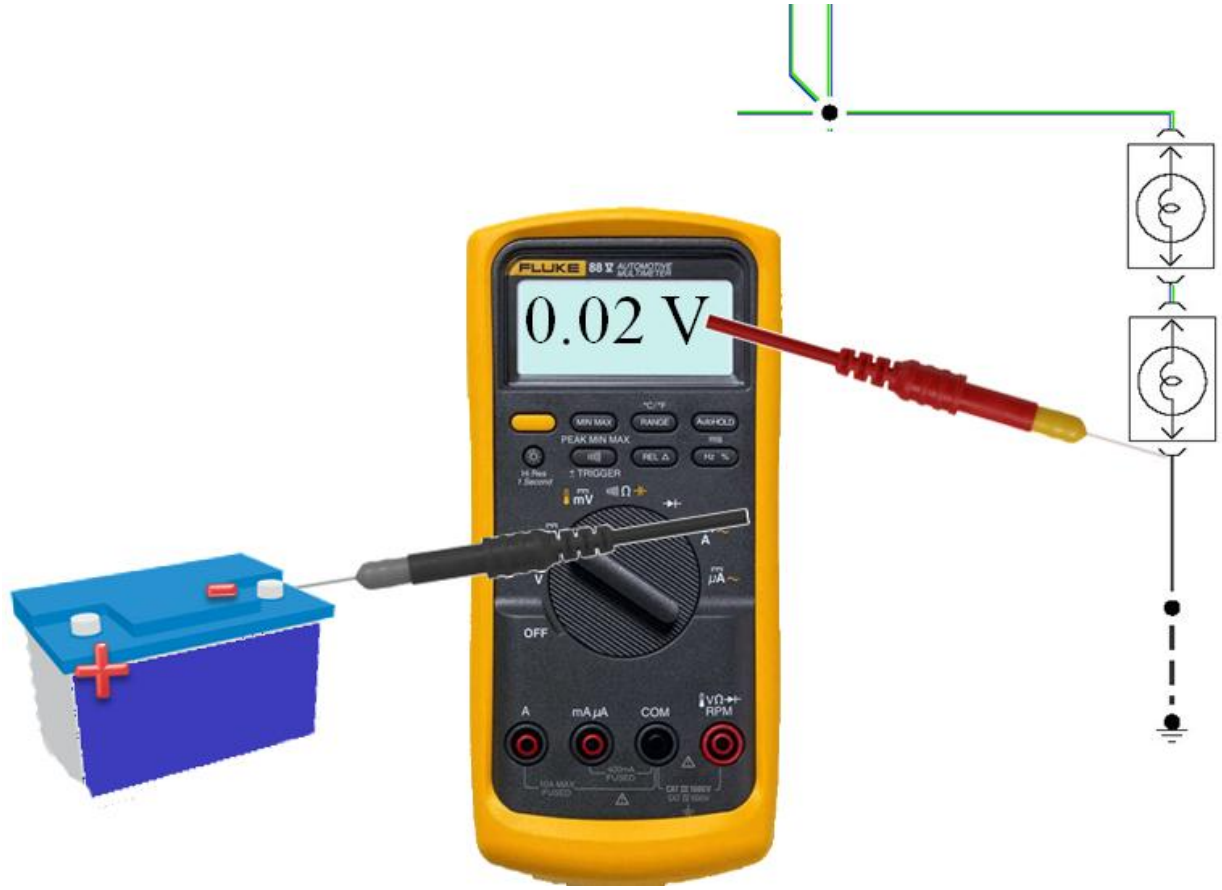

The ground circuit from the lamp back to battery negative has a very small voltage drop.

Parallel Circuits

In a parallel circuit the current changes and the voltage remains the same. Current is divided going into the components. So it is divided by the amount of resistance in the components. Voltage will be the same at each component's positive side. Voltage is dropped going through the component (load) so it will be less on the power side of the circuit. The total circuit resistance and voltage remains the factors behind how much current will flow, but when it has more than one path in which to flow it will be divided between them. Each component in the circuit will have the same voltage available to it. And of course, they will have equal voltage drops through the loads.

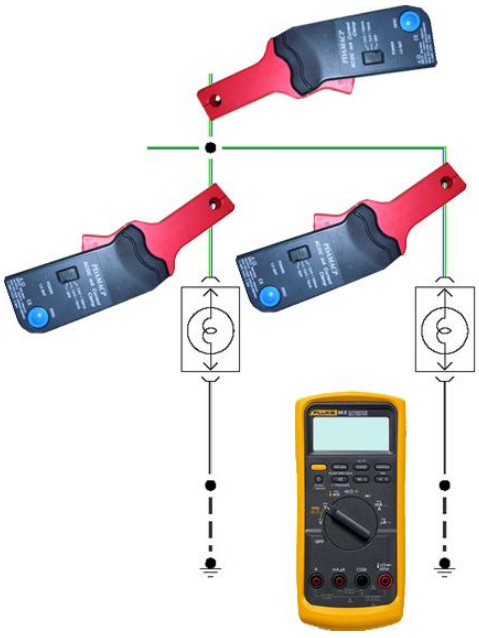

Voltage is the same in all branches

Top feed circuit current is the sum of the current in the branches

If both loads have the same resistance;

Left 1.5 amps

Right 1.5 amps

Top feed circuit 3 amps

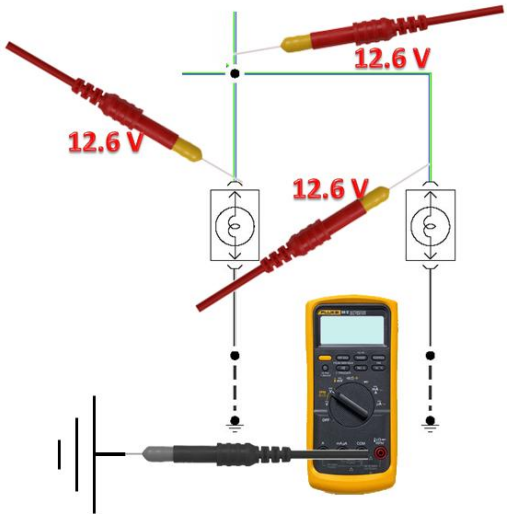

Voltages are the same

Top 12.6 V

Left 12.6 V

Right 12.6 V

Because both loads connect to the same feed point, where current splits for each branch

Voltage will be dropped by the loads

There should be minimal ground voltage after the loads

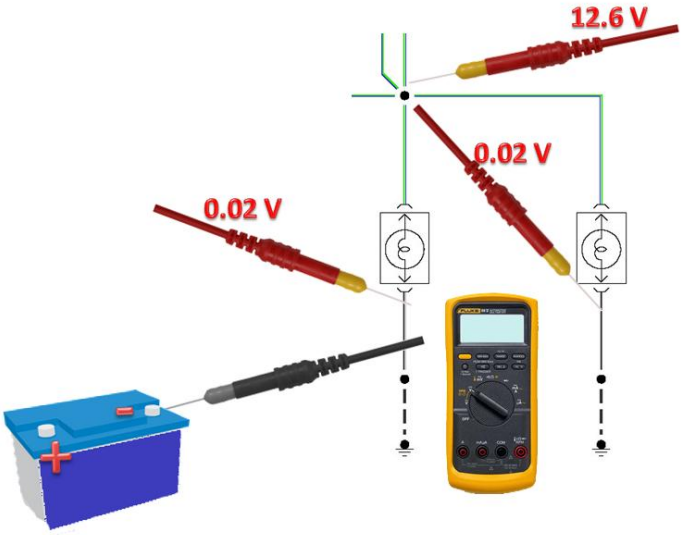

Battery Connections

Charging batteries can be used as an example to show voltage and current in series and parallel circuits. Connecting batteries in series increases the available voltage. The available current is the rating of the weakest battery.

Charging the batteries in parallel allows the current to flow equally into each battery. Charging them in series current is determined by the total resistance of all the batteries.

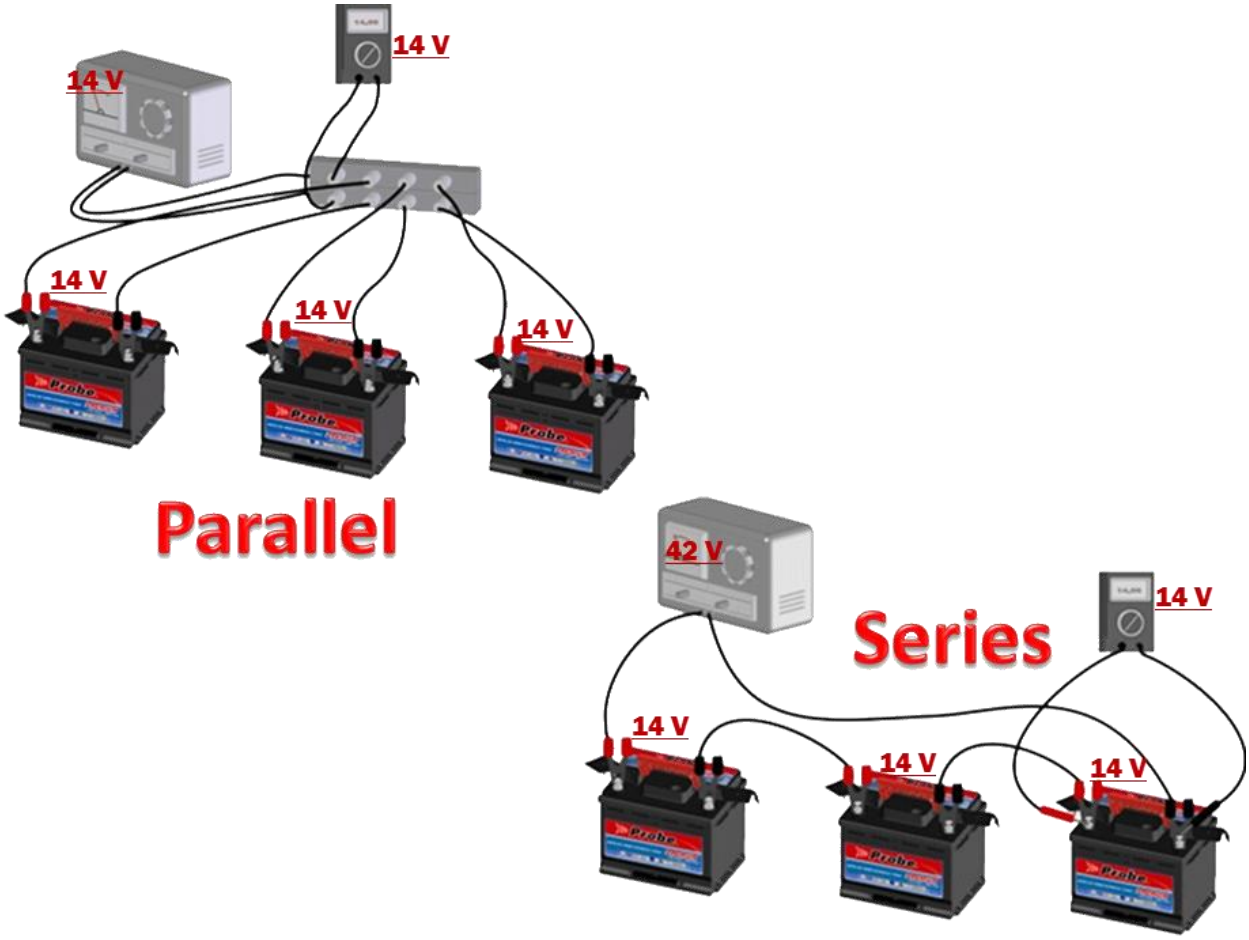

Circuit Diagnosis

When diagnosing this we measure normal battery voltage to the circuit. If the voltage is normal at one lamp and below normal at the other, there is a performance problem. This is the simplest diagnostic procedure for electricity, back probe from the bad to the good. Or probe forward to the bad.

A performance problem occurs where a device does not receive normal B+ and ground. Do not expect a device to operate without normal power and ground.

We use performance problems to identify the areas to test.

Area testing is the process of identifying the area that needs pin point diagnostics.

OBDII does the area test for us and directs us to the area to pin point test.

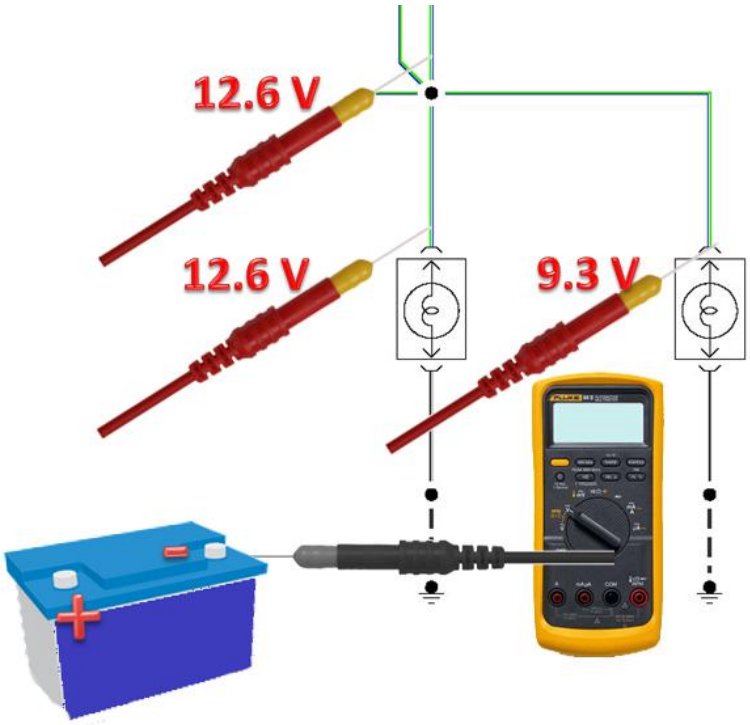

Why would we select the difficult task of connecting to the lamps for this test? Because we identified a problem with the lamps, but could we take it further to be more efficient?

Performance testing detects areas that need pin point testing and identifies areas that are normal and do not require pin point testing. We use this to reduce the number of tests to the areas that have a problem. Study the diagrams for failure patterns and to identify the likely cause of the problem.

Identify Performance Problems

Check the operation of the system being evaluated

Can you identify a device that has a performance problem?

Is there a pattern of problems that directs you to an area?

Keep it simple, test the easy things first

We will use our last diagram as an example

Determine the most likely cause of performance problem;

Use the circuit diagrams to identify operating conditions

Is part of the circuit normal?

What part of the circuit is abnormal?

What area that is the likely cause of the problem?

Tail lamp example

If a frequent failure is indicated by the performance test, replace the component if it is easy to do and the cost impact is small. Get the easy fix when the opportunity presents itself.

This is a simple area test; one tail lamp does not light up.

Check the bulb; it is the easiest to thing to do.

Keep it simple

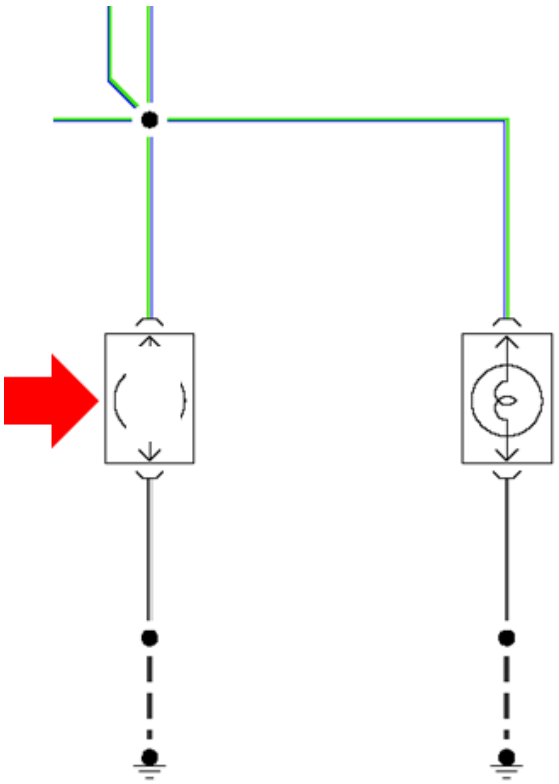

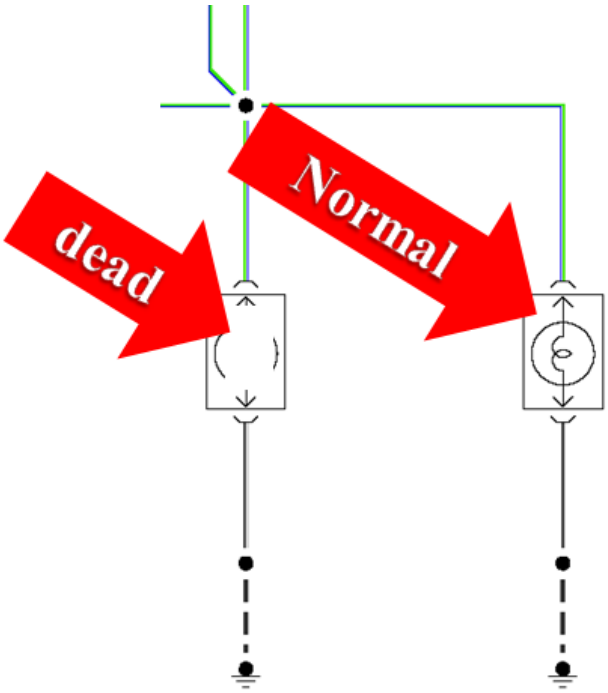

Pin point the problem

If the quick fix, changing the bulb, does not correct the problem, decide what area is the likely cause of the problem.

The problem is in one branch because the right lamp is normal; it could be the socket, ground or B+. B+ is straight forward, but we need to discuss grounds.

Circuit Grounds

Ground is the reference point in an electrical circuit from which all voltages are measured, or a common return path to the battery for current. Grounds are just as important as the power or component.

Grounds complete the circuit back to the battery or other sources.

In the automotive industry we use dedicated as well as common ground. Even the dedicated ground isn't an isolated ground. All grounds in the vehicle end at the battery's negative terminal even if it passes through an electronic module as a signal ground. We will discuss control module grounds later.



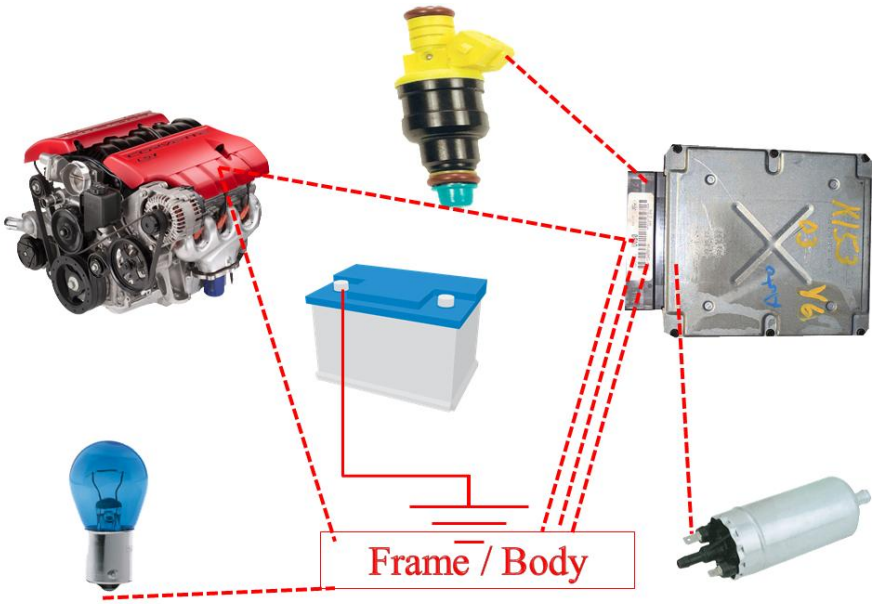

Control Module Grounds

Control modules have special internal ground circuits for sensor signal return and device controls. The control module depends on chassis ground for the final ground reference for the system.

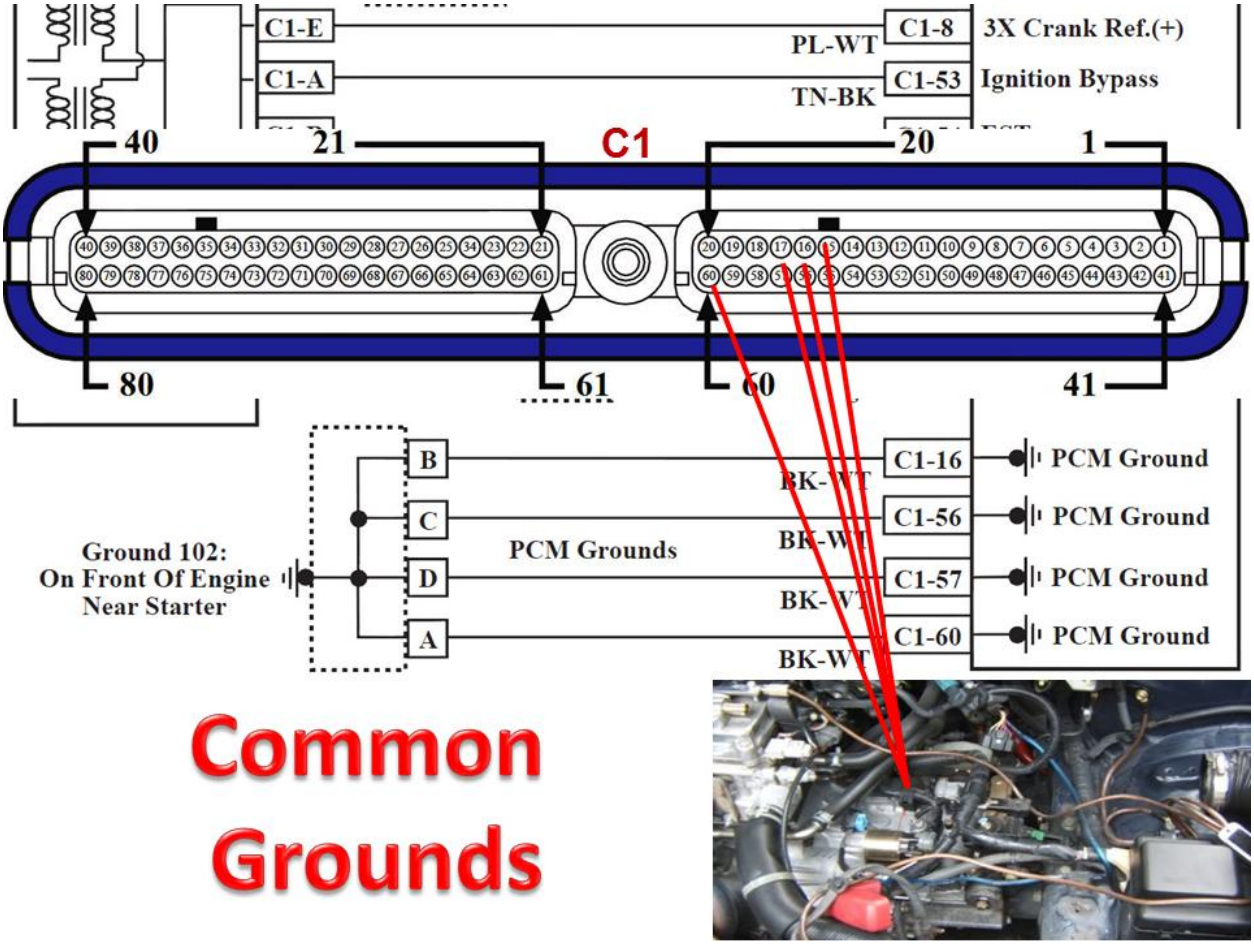

This image shows a PCM that uses multiple grounds. PCM connector C1-16, C1-56, C1-57, and C1-60 cavities all connect at the same place on the engine block. Without an internal schematic of PCM we don't know how they connect inside. For diagnostics that won't be a problem because they all test the same. Place the positive DVOM lead to the conductor as it leaves the PCM. And the negative lead goes to the ground stud on the engine block. With Key on and the Engine off (KOEO) the voltage drop shouldn't be greater than 0.050 volts.

Start the engine when testing computer grounds, the ground voltage shouldn't go any higher than 0.85 volts during engine cranking and 0.10 volts with engine running.

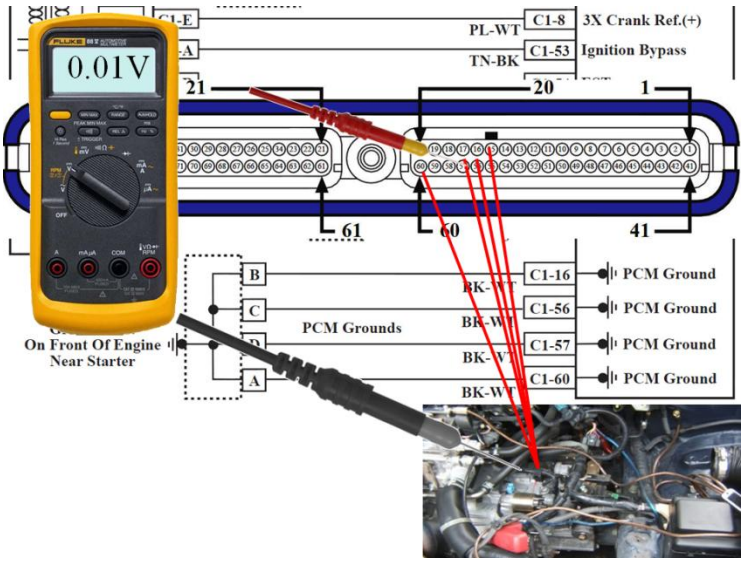

There are grounds connected to the chassis and engine blocks. Groups of components are frequently tied to a

ground point. Use the diagram to determine the likely location of a problem where grounds are shared between several components. We use voltage drop testing to locate ground problems.

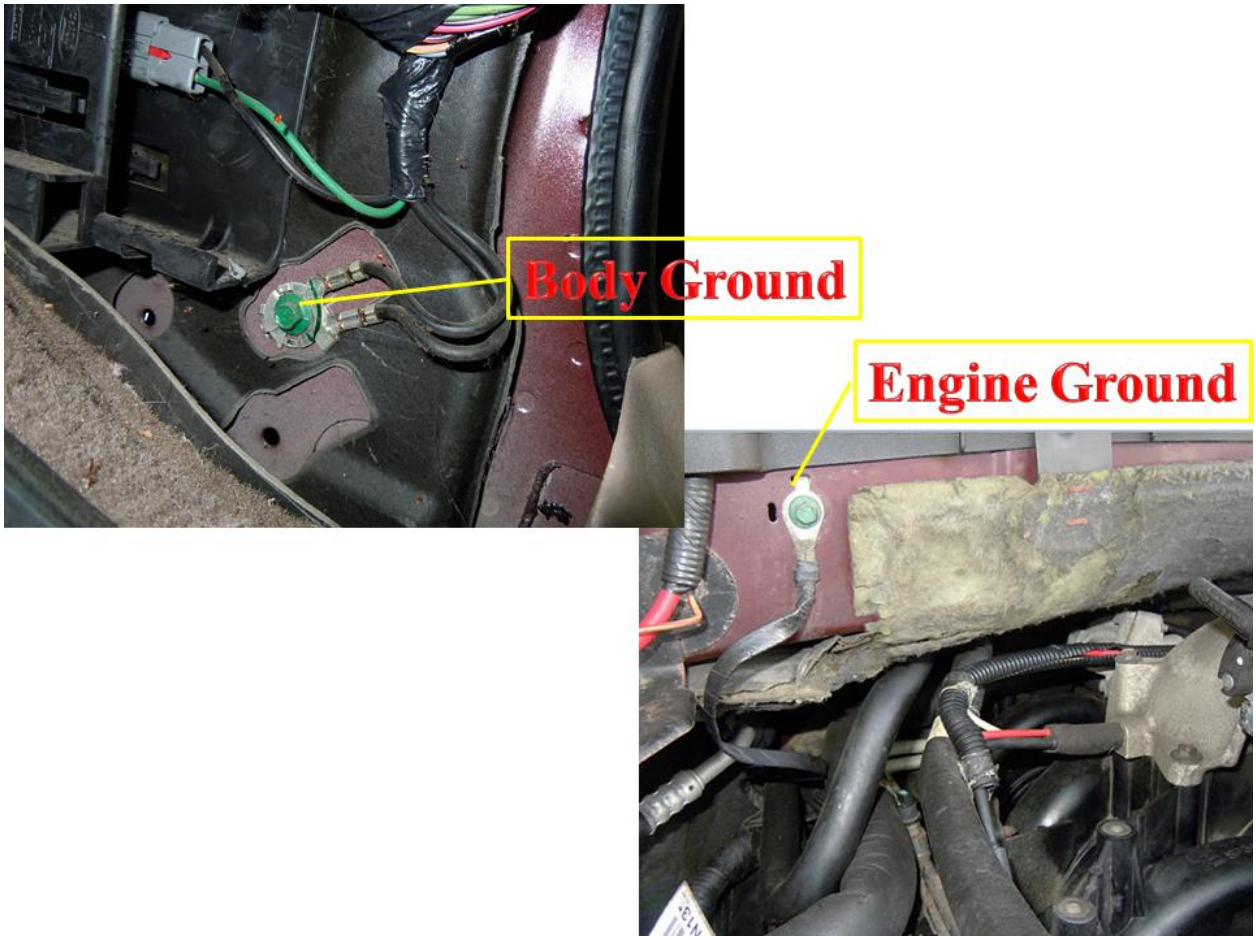

Some technicians select an ohm meter, but the ohm meter does not provide sufficient current flow for an accurate test.

Voltage drop testing

Any computer ground should be less than 0.050 volts (50 mv or less)

Any solenoid ground should be less than 0.700 volts (700 mv or less)

Starter solenoid should be less than 0.500 volts (500 mv or less)

Lighting ground should be less than 0.300 volts (300 mv or less)

Ground voltage at the engine block can be high because of coolant electrolysis.

Electrolysis Can Be Measured

Electrolysis occurs because of the different metals and the reactive solution the cooling system will store electricity. This is a test to see if the engine's cooling system has stored electricity. Check the readings with the engine off, cranking, and running. Any voltage higher than 0.300 volts will accelerate the deterioration of an aluminum radiator and heater core. This class isn't about heater cores. It is about electricity. This example is helpful in understanding batteries but it is equally important in understanding grounds. Refer to this example when thinking/testing grounds. Grounds lower voltage. If current is stored in the ground circuit it will raise the ground voltage. If ground voltage is higher than normal, it can cause performance problems in a circuit.

Here is a good example of diagnostics. This test isn't just pulled out of the air and performed on every vehicle. Any testing requires you to observe the results closely. How did the technician get to this point? What did he see in his diagnostics that told him to test for electrolysis in the engine's cooling system? If you ever want to feel comfortable diagnosing electrical problems learn to test properly and learn to read the results correctly. This technician was looking at scan data on a scan tool. He noticed that many of the data values were higher than normal. Understanding that grounds lower voltage and powers raise it, he knew he had a ground problem. He may or may not have used a vehicle specific schematic for this problem. Connections that are loose or bad in any way can cause ground voltage to be higher than normal. He didn't want to start with testing every ground in the vehicle. In scan data he saw ***most*** of the data higher than normal. So he started with what is common to all grounds. He looked at the negative battery terminal which was clean and tight. Then he moved to the next common item that made sense. And checked the radiator for electrolysis

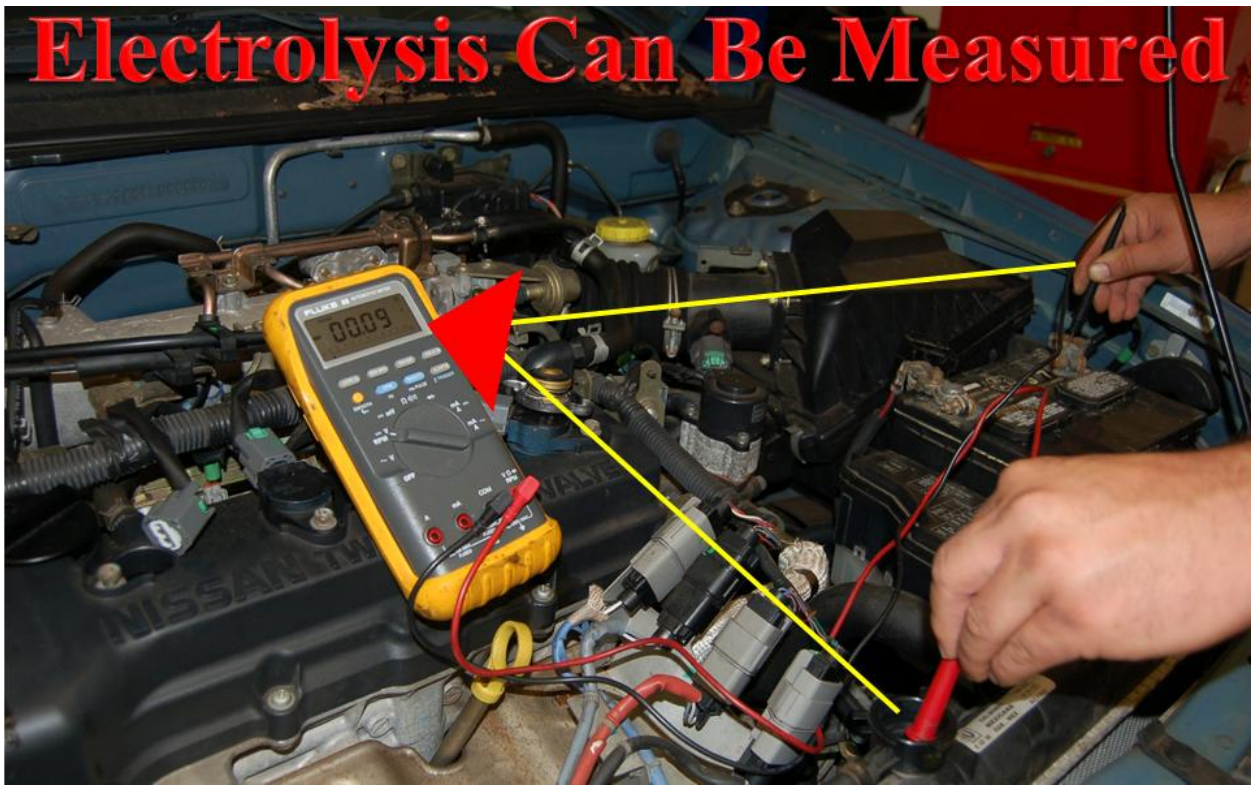

Schematic Diagrams

A schematic in electronics is a drawing representing a circuit. It uses symbols to represent real-world components. The most basic symbol is a simple conductor, shown as a line. If wires connect in a diagram, they are shown with a dot at the intersection.

We will use a vehicle's Power Train Control Module (PCM) for an example of a schematic. Use your shop's information system to look a schematic for a PCM. Information systems are different in how they navigate through the mounds of information and schematics. There isn't any magic in reading schematics. The simple version is to trace the lines on the page with your finger. But that is really not the way. If you have trouble reading them, stop and study the symbols. The most common are the most common and those are the ones you'll need to remember. Find the circuit you want information about. Then look for the component you're after. There are three things you'll need to start with about that component.

1. Where does it get its power and what components share power?
2. Where is its ground and what components share ground?
3. What is, and where is the control device.

As you view the schematic check out the connectors and splice. You'll need them if you have to specifically test certain parts of the circuit.

Pin point circuit problems

We will continue with our earlier problem with the tag lights. Taking time to study the diagram and the fault pattern gave us the shortest diagnostic direction. The study identified two common areas that have the problem.

Identify the B+ supply arrangement

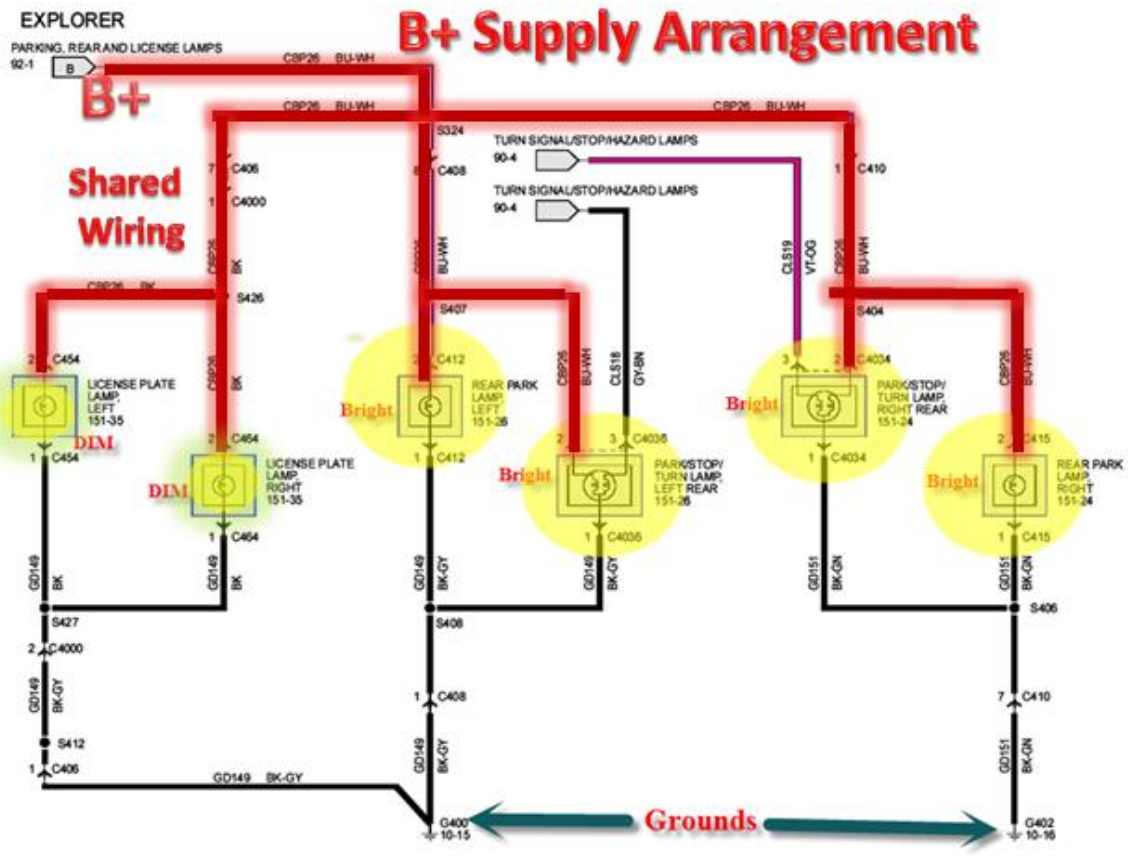

The splices and connectors are areas that sometimes cause problem, especially after collision repair where wiring harnesses can be damaged.

Area test example

By taking time to study the diagram and the fault pattern we found a good diagnostic direction. The study identified two common areas that have the problem. The problem could be caused by a B+ problem or ground problem. What part of the B+ supply must be normal for the other lamps to operate properly?

- Failure pattern; two lamps are dim, what do they have in common?

B+ must be normal to the lamps on the right side of the diagram because the lamps operate normally.

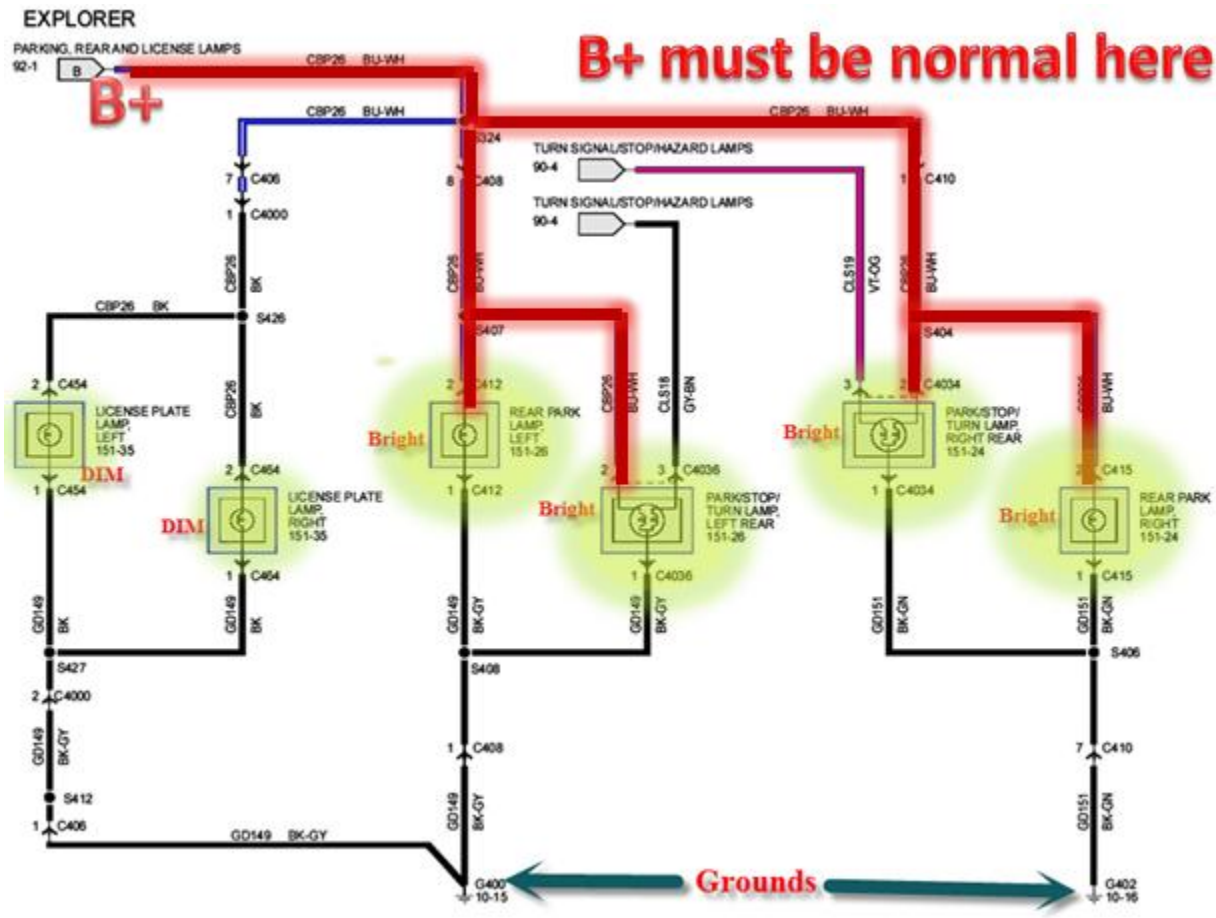

We have identified two areas to test for the fastest diagnostic. What part of the B+ and ground circuits need to be tested? Remember, the problem is common to both tag lamps, some it has to be in shared wiring. Now find a convenient place to test these two areas.

Part of the grounds must be normal for the lamps on the right side of the diagram to be normal.

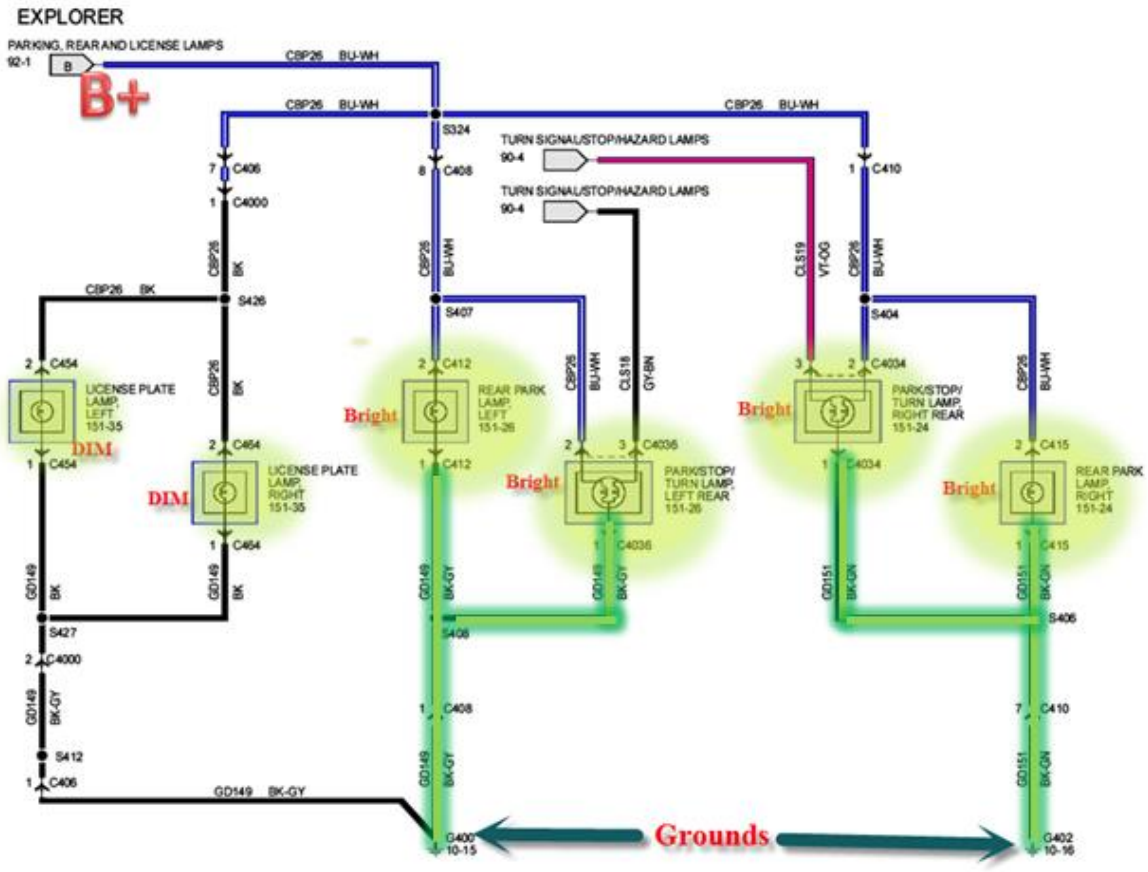

We now have two areas that need pin point testing. Notice how effective use of the diagram reduced the number of tests we needed to perform to arrive at our problem areas.

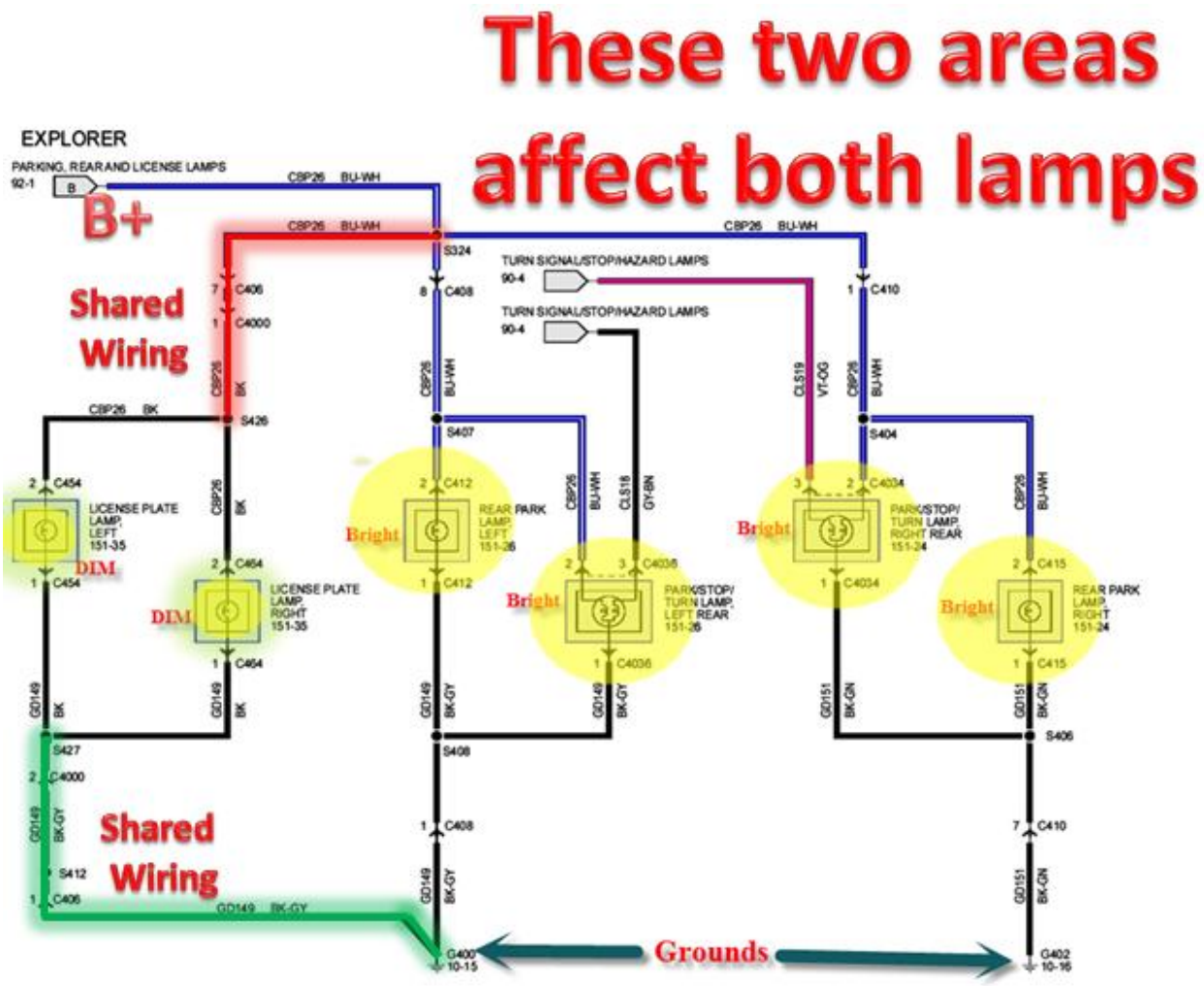

Do not jump into the wiring harness yet.

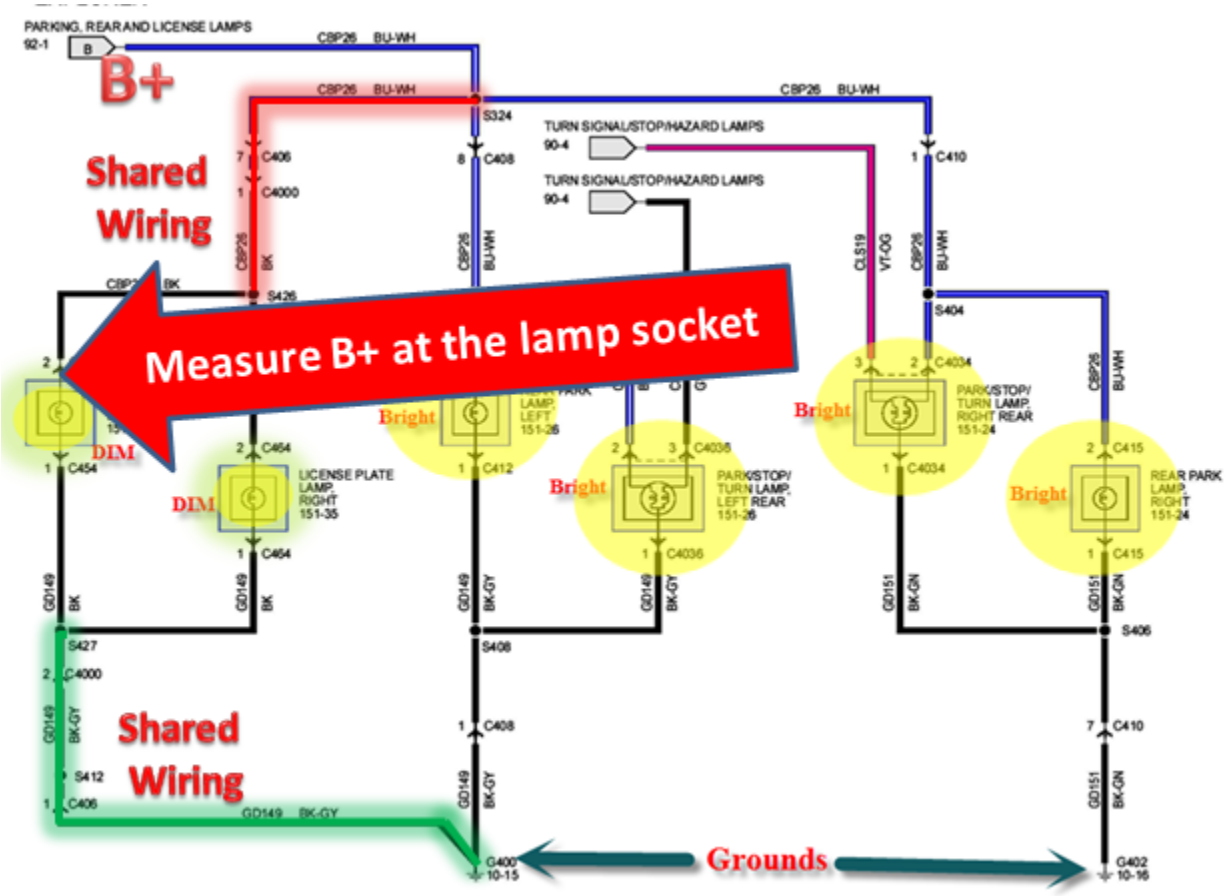

Measure B+ voltage at the lamp socket because it is an easy access point.

If B+ is low at the lamp socket;

The problem is in the circuit with S324, C400, C4000 and S426.

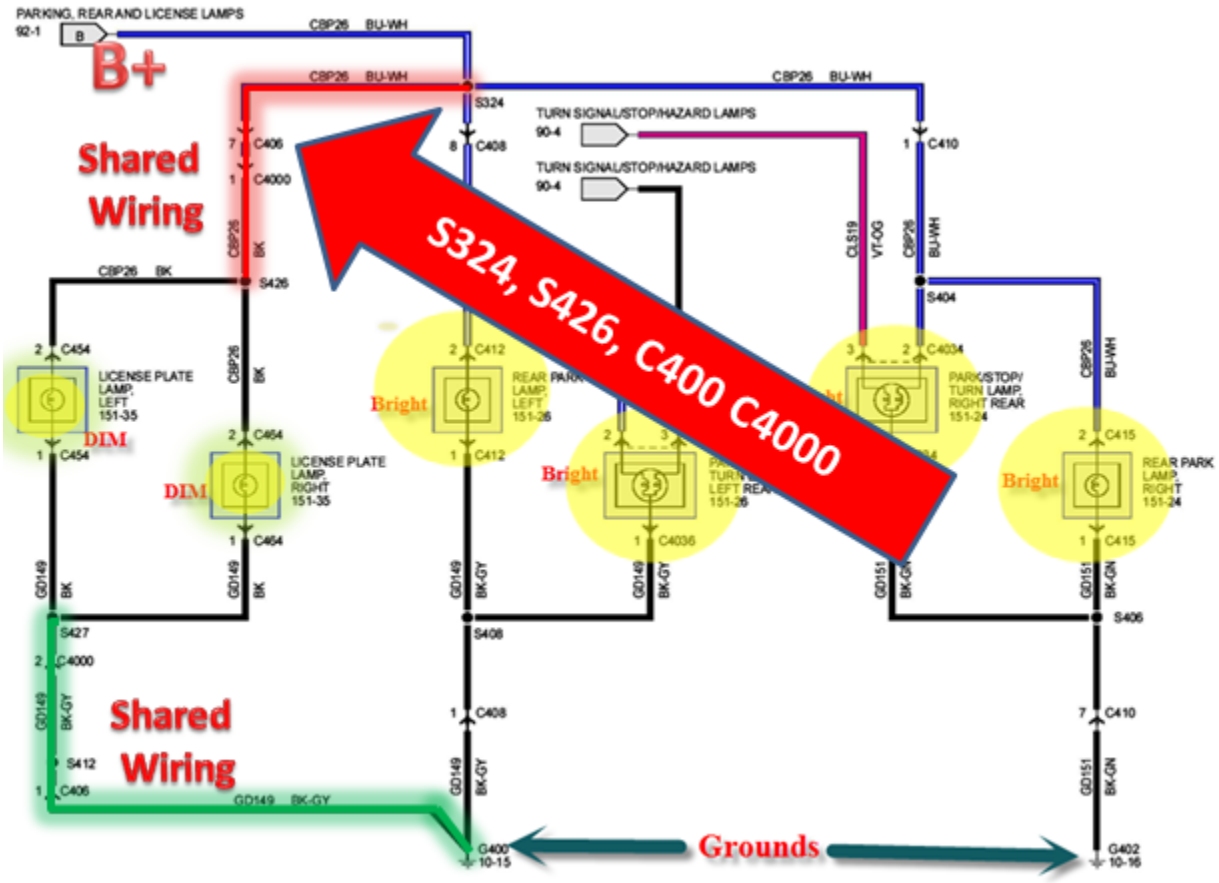

Our guideline for voltage drop testing is to check the voltage with normal current flow. Turn on the lights and have the lamps installed for this test.

We have two connectors in the B+ circuit and they could be the easiest place to test next. Checking B+ at either connector cuts the problem area into two parts. If B+ is normal, the problem is the circuit between the connector and S426. If B+ is low at the connector, the problem is in the circuit between the connector and S324.

If B+ is normal at the lamp socket;

The problem is in the ground circuit.

If B+ is normal, the problem is in the ground circuit with **S427, C4000, S412, and C406. G400 is used by other lamps which are normal, so it is an unlikely cause.** The connection to G400 for ground circuit GD149 can be the problem.

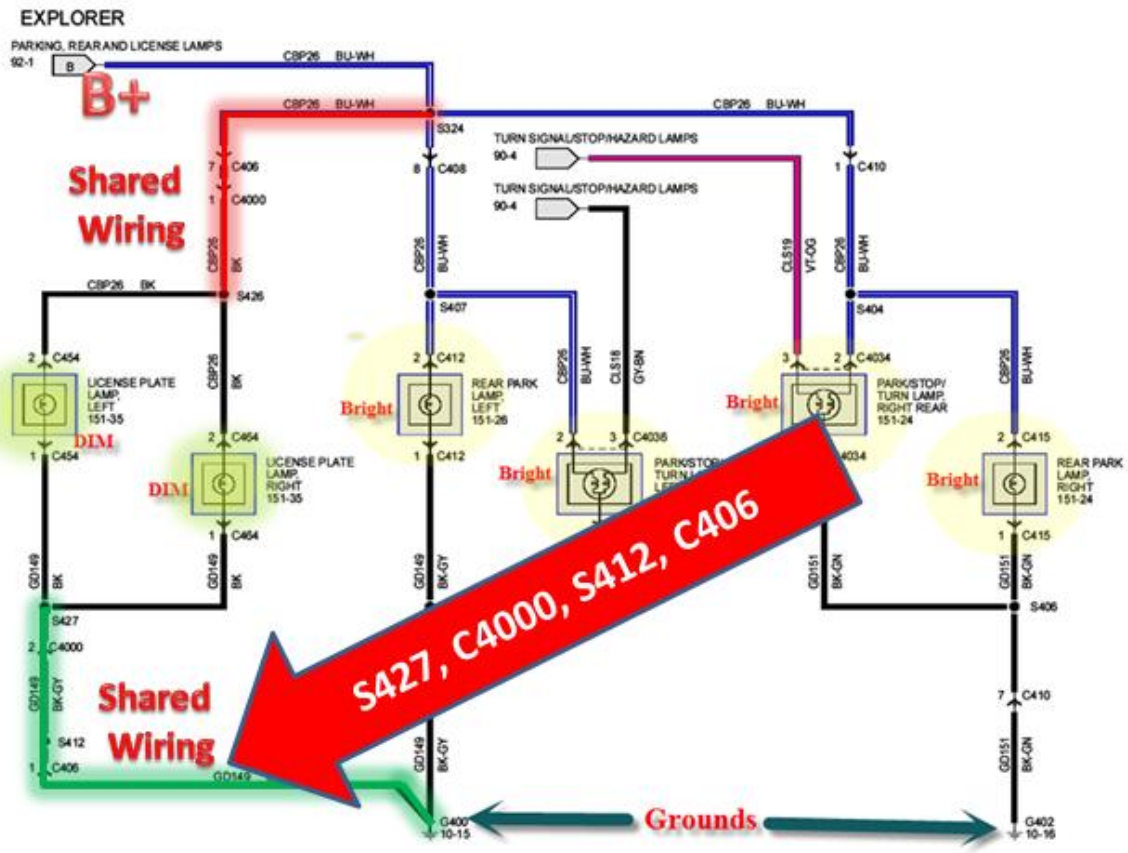

Select a convenient connector to check for a ground voltage drop.

Our guideline for voltage drop testing is to check the voltage with normal current flow. Turn on the lights and have the lamps installed for this test.

- More complex circuits can be diagnosed with same style of area and pin point testing. We just used.

Relay Operation

We will move from simple lamps to relays. Relays are used to control higher powered circuits with a small control current. We say current because the relay operates by magnetic attraction of the power contacts. There are two methods used to control relays. High side switching controls B+ to complete a circuit that has a ground. Ground side control supplies ground to a relay coil that has B+ connected. The end result for both methods is a complete circuit with current flow.

Relays use current flow to create a magnetic field to activate. The power contacts must make a low resistance connection when activated.

Factors Effecting Coil Current

- Relay coil current and the resulting magnetic field is effected by;
    - B+ applied, low B+ may not activate the relay because of reduced current flow
    - Ground connection, high ground voltage drop may reduce current below the value needed for activation
    - Unexpected circuit resistance can reduce coil current

Checking relay coil circuit

- **B+ in this example is supplied by the PCM to activate relay**
- **PCM requires a good B+ supply**
- **Charging system must be normal**

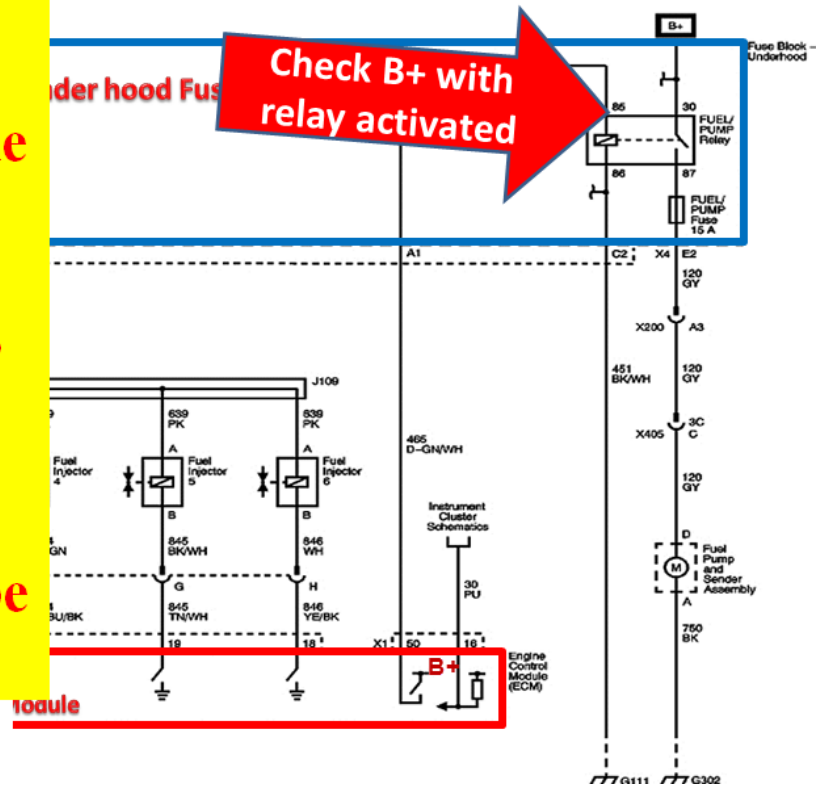

B+ comes from the PCM which uses the fuel pump control software to determine when to activate the fuel pump relay. Be sure the PCM is operating properly if the B+ is not applied when you test the circuit. Remember, B+ is only normal when the charging system is operating properly and the PCM has a normal B+ supply.

Relay Area Test

- Determine normal operating conditions for the relay being tested and verify operating conditions
- Find the cause of control problems if the relay does not receive the correct commands
- If relay does not operate properly, i.e. fuel pump does not energize;

- Check control signal, does the relay coil have the correct voltages?
- Do the relay power contacts make good connections?

Relay Operational Check

- Determine the conditions where the fuel pump should run.
- Set the proper conditions for the relay to energize and monitor the results
- If the relay was not energized by the PCM, investigate PCM control

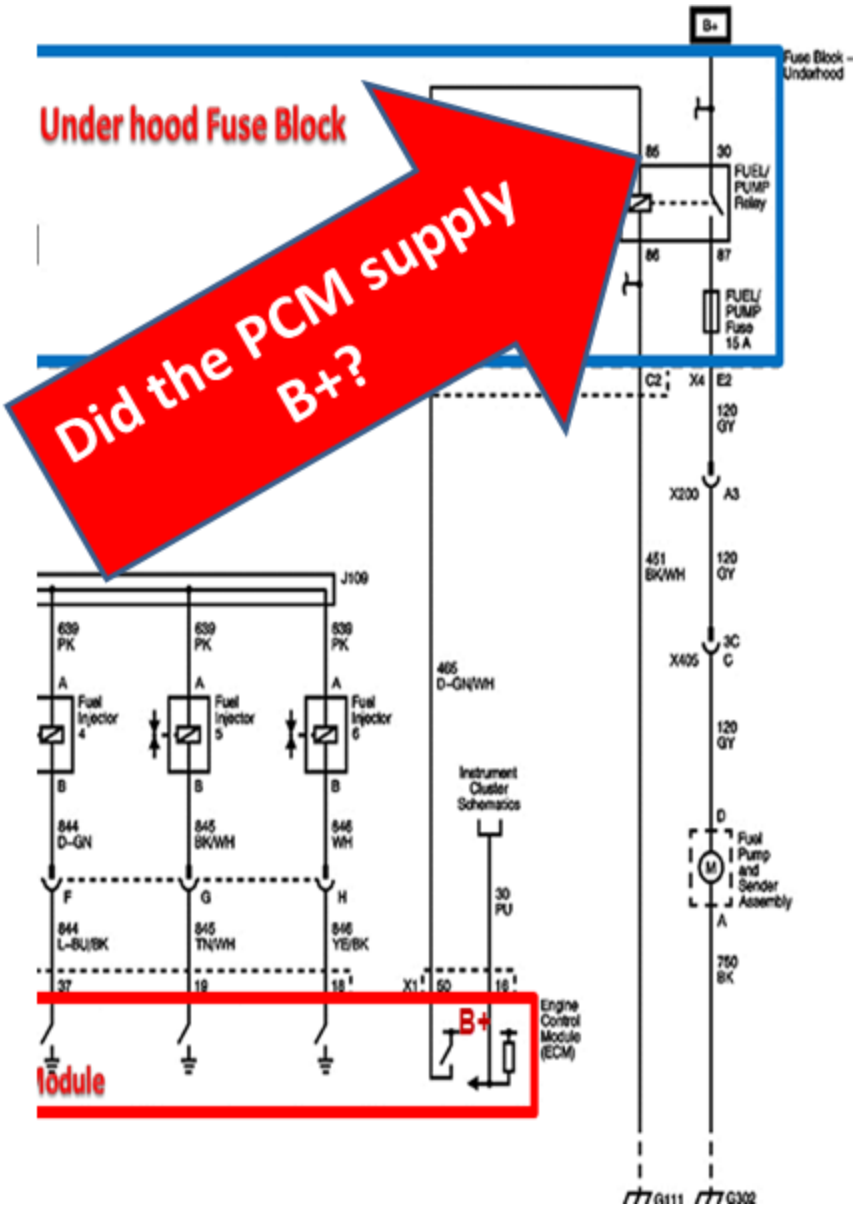

The purpose for this step is to determine if the relay received the proper command, if it did not, it is a PCM control issue. If the proper voltage was applied to the relay coil, determine if the relay has a complete circuit and verify relay operation.

Determine the type of control used for relay activation

Hi side driver supplied B+

- Low side driver supplies ground

Check control signal for normal operation.

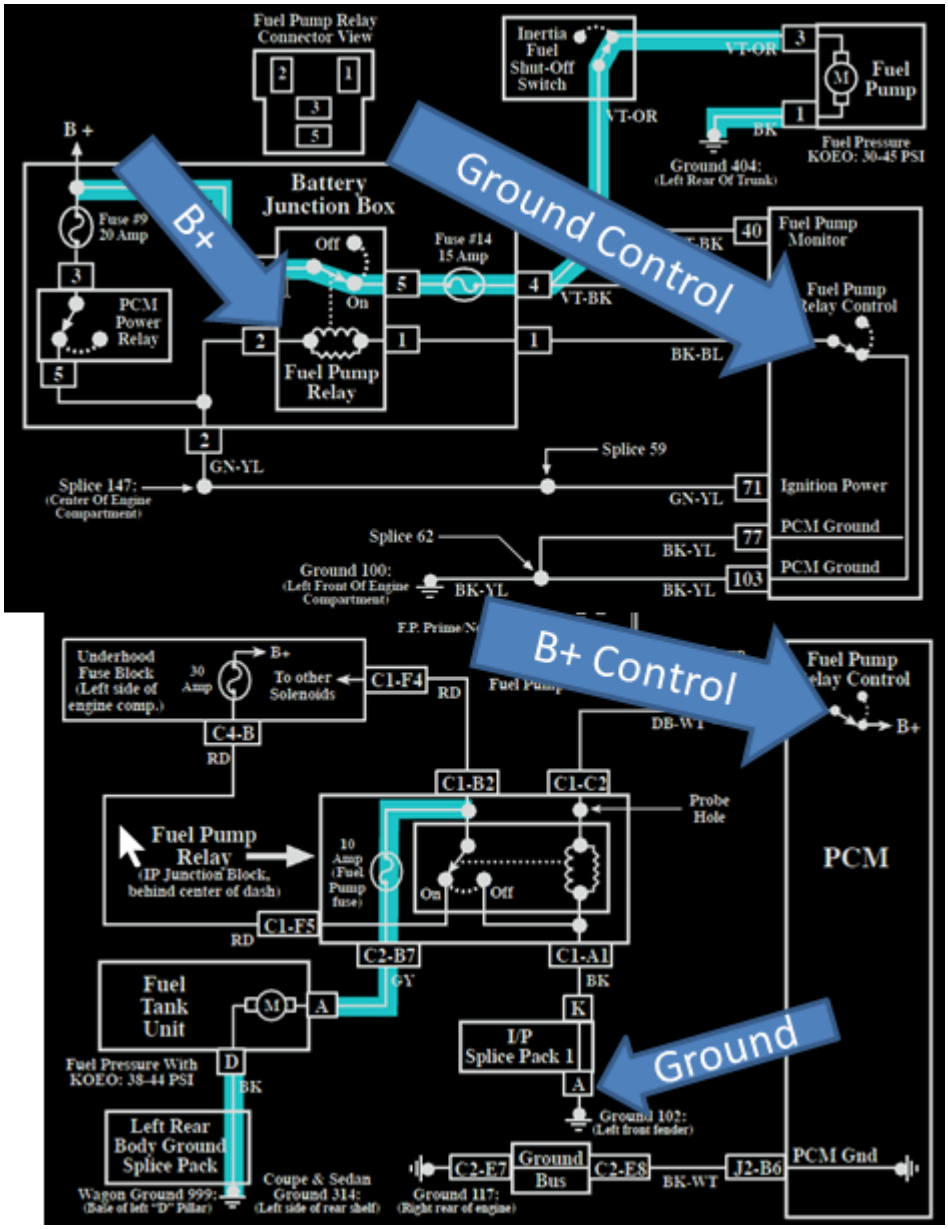

The relay coil can be controlled by supplying ground to complete or by applying b+ to complete the circuit. You can determine the type of control by observing the other connections to the relay coil. When a high side driver is used, the other side of the relay coil will be attached to ground. When a low side driver is used, the other side of the relay coil will be attached to B+. The two diagrams show both types of driver control.

Low side driver

Low side driver signals;

- Energized, voltage will be under 1 V, usually under 0.6 volts.
- De-energized, voltage will be B+

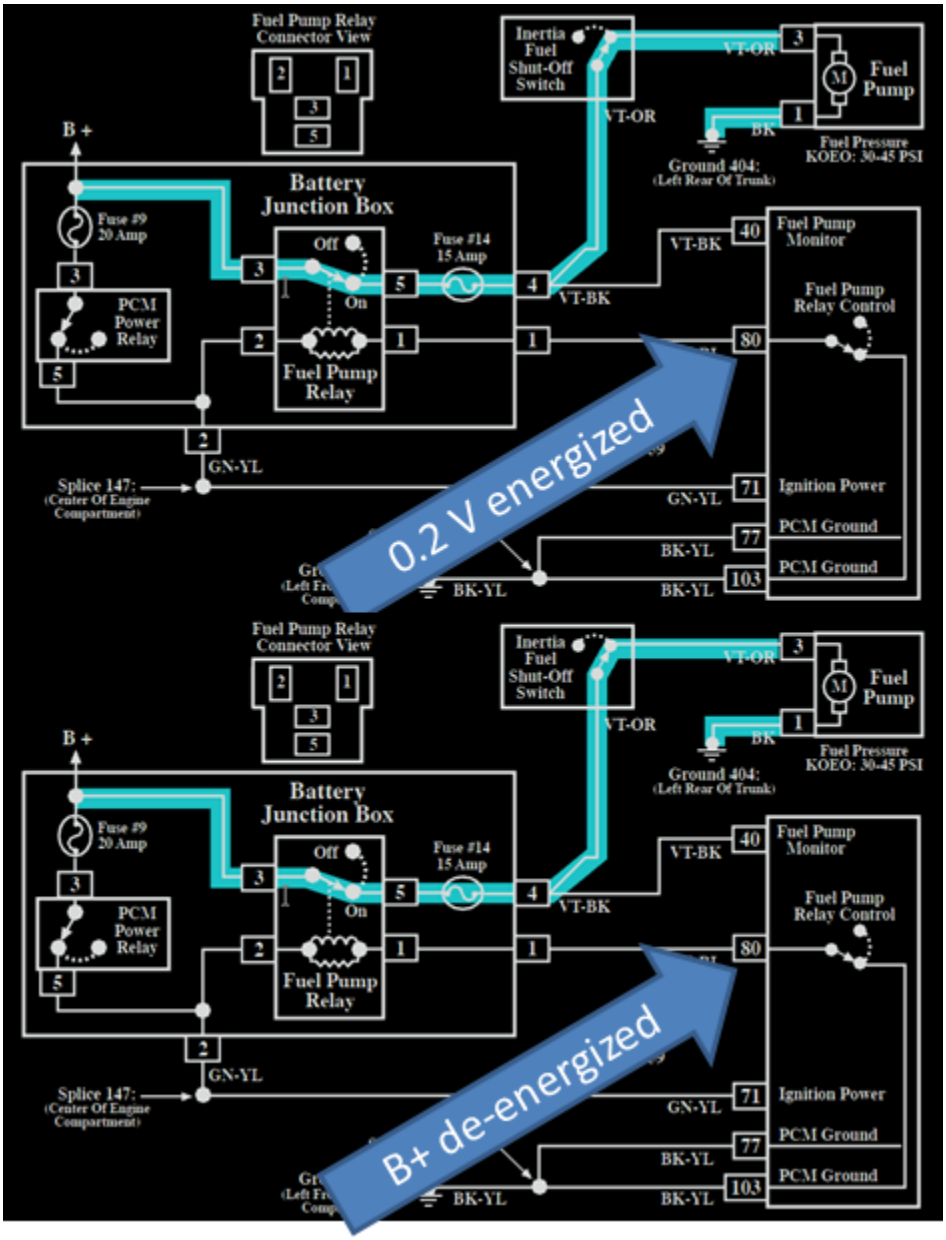

- Low side driver control requires a normal B+ supply to the relay coil so the relay can be energized by supplying ground to complete the circuit. The voltage on the control side of the coil will be under 1 volt when energized and usually under 0.6 volts. The control signal will go to B+ when the ground control is open.

Remember; do not overlook normal charging system voltage and proper control logic needed to operate the relay.

If the ground energized voltage is too high, it could be caused by poor PCM grounds.

Control Voltage too high

If the voltage is over 1 volt when referenced to battery negative, it is usually a problem with ground. The driver uses PCM ground to ground the control circuit. Sometimes it is the internal PCM grounds that cause the problem, if the internal grounds are a problem, PCM ground at pin 77 will be normal.

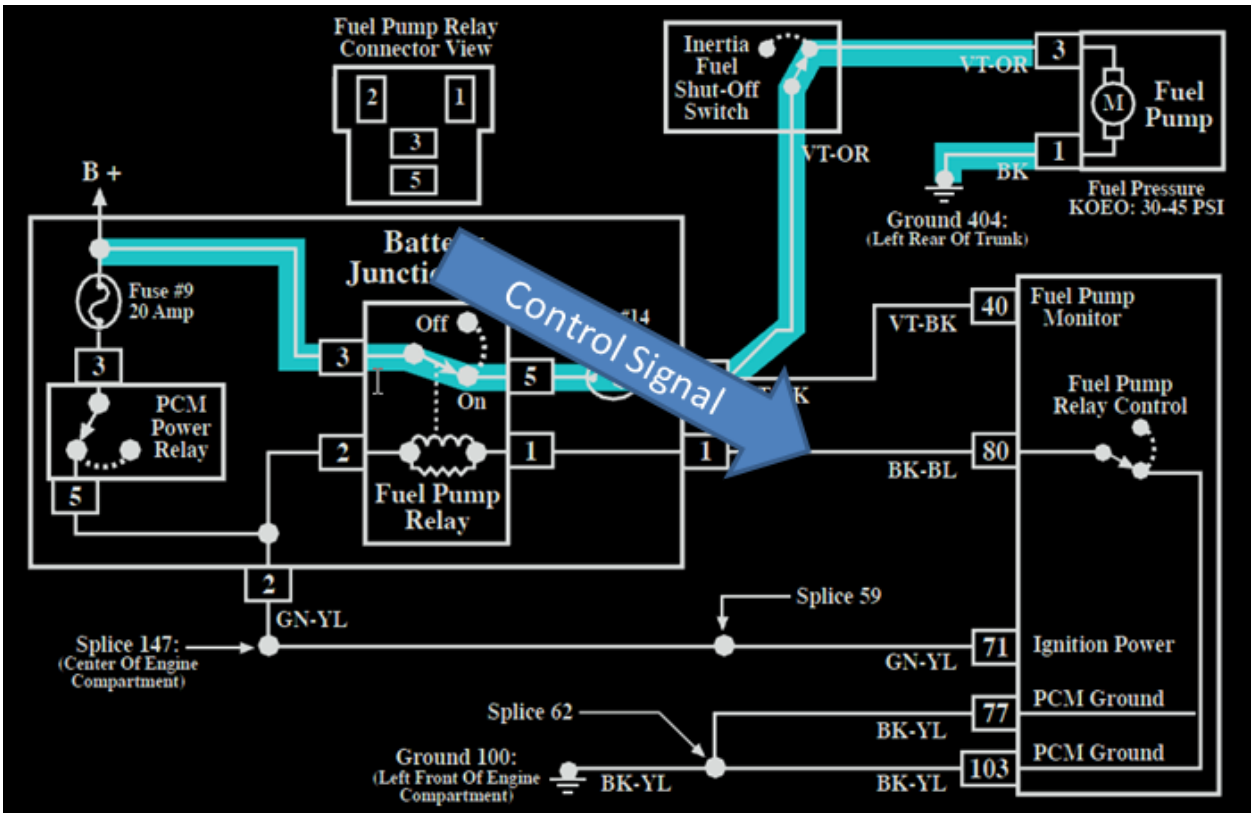

High Side Switching

B+ to the PCM must be normal for the control voltage to be normal.

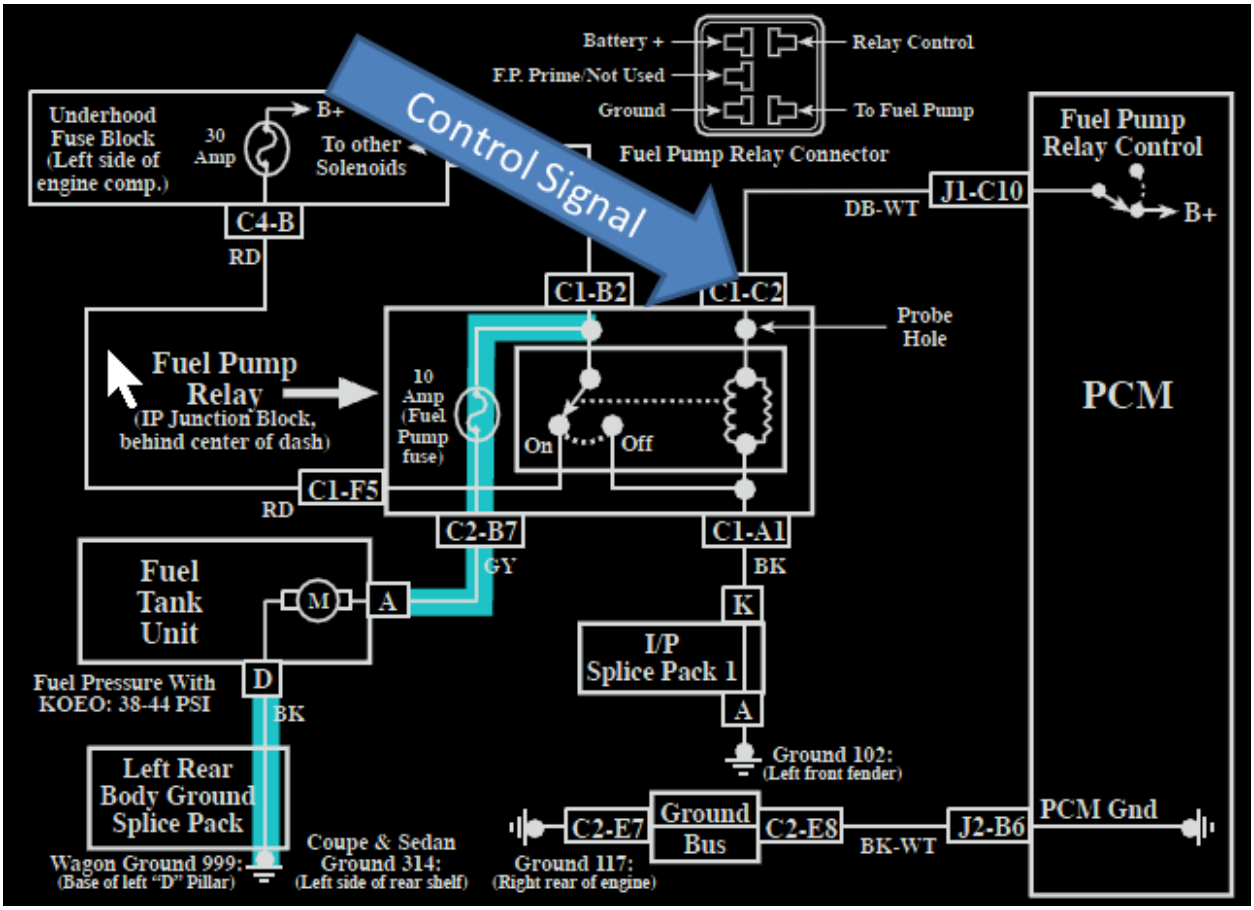

Some relay operation is more complex when mechanical switches are combined with electronic controls.

More Complex Operation Analysis

- We say check for normal operation to start an area test, but some systems are relatively complex
    - Technicians need an understanding of the complex systems
    - Training and experience are the only ways to gain an understanding

We will use a Ford starting diagram to show how to do a complete operational analysis on a complex system.

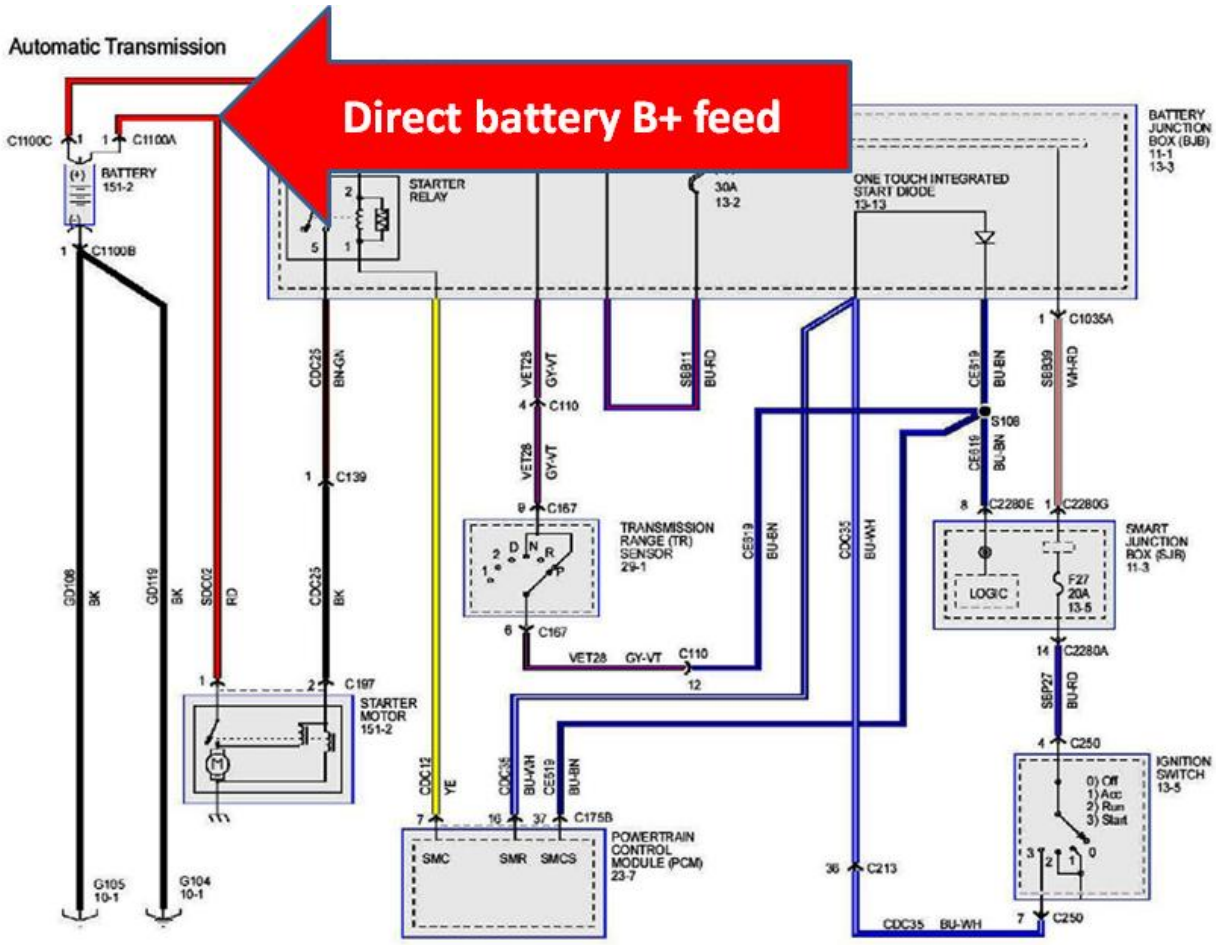

Starter solenoid control comes for the starter relay. The starter solenoid is grounded and the control id B+ from the starter relay located in battery junction box. The solenoid is ground on the bottom, so it is using high side switching for control. The starter solenoid is grounded and the control id B+ from the starter relay located in battery junction box. The solenoid is ground on the

bottom, so it is using high side switching for control.

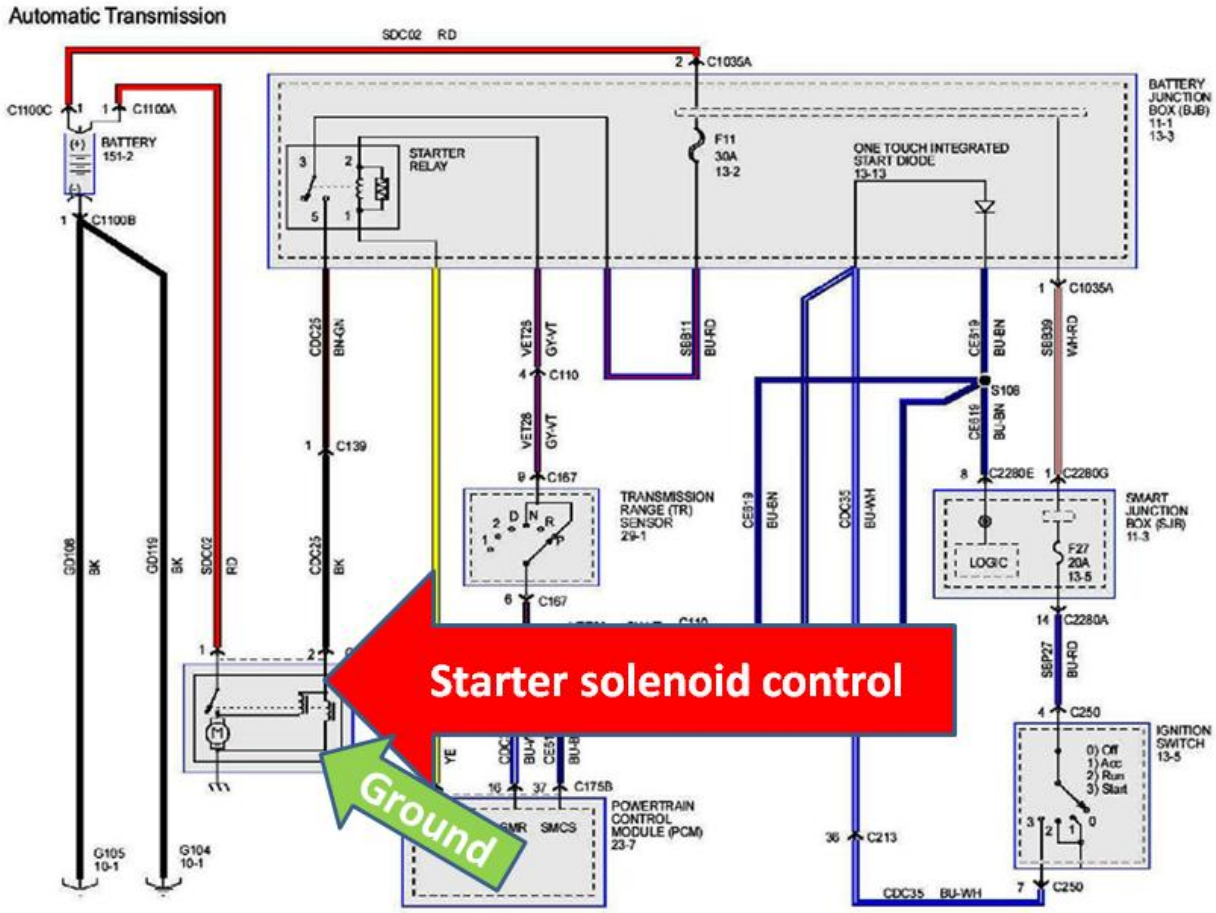

The starter solenoid is grounded and the control id B+ from the starter relay located in battery junction box. The solenoid is ground on the bottom, so it is using high side switching for control.

Starter Relay power contacts

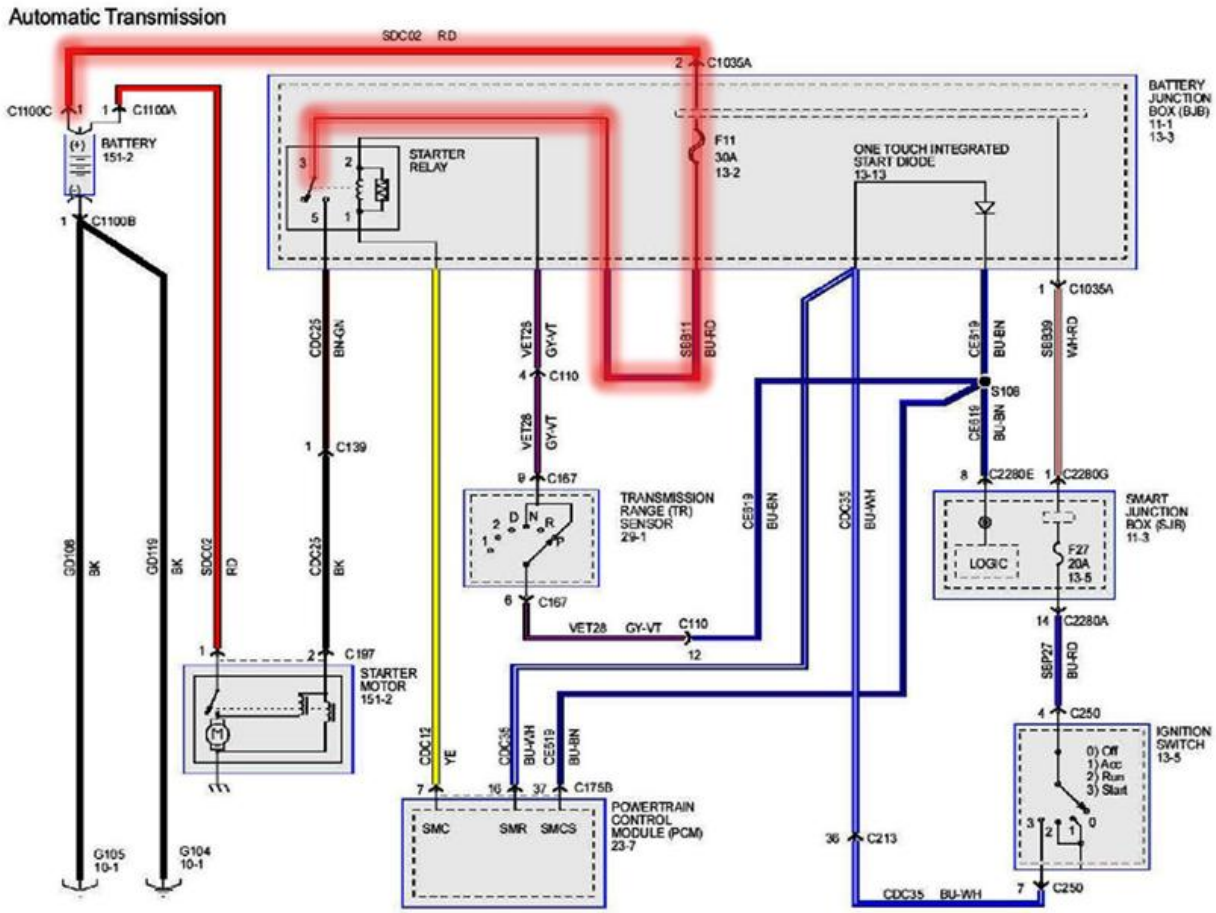

The starter relay power contacts get B+ from the battery direct feed with a 30 A fuse protecting the circuit.

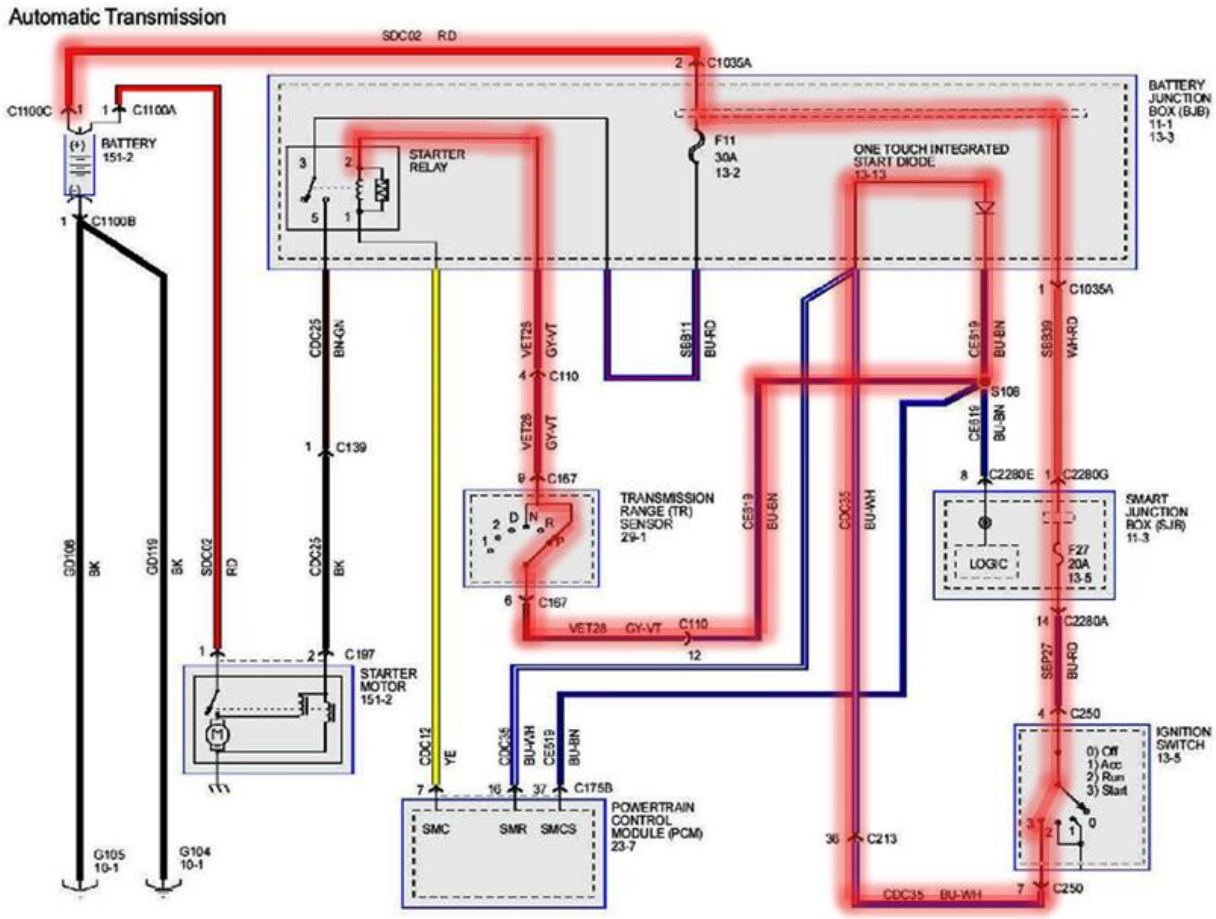

The control circuit for the relay receives B+ through the ignition switch start contacts and the park-neutral switch. The top of the relay coil has B+ when the park-neutral switch is in park or neutral and the ignition switch is in the start position. The starter relay will not energize until the PCM supplies ground to the end of the relay coil. We will cover the extra connections for B+ later.

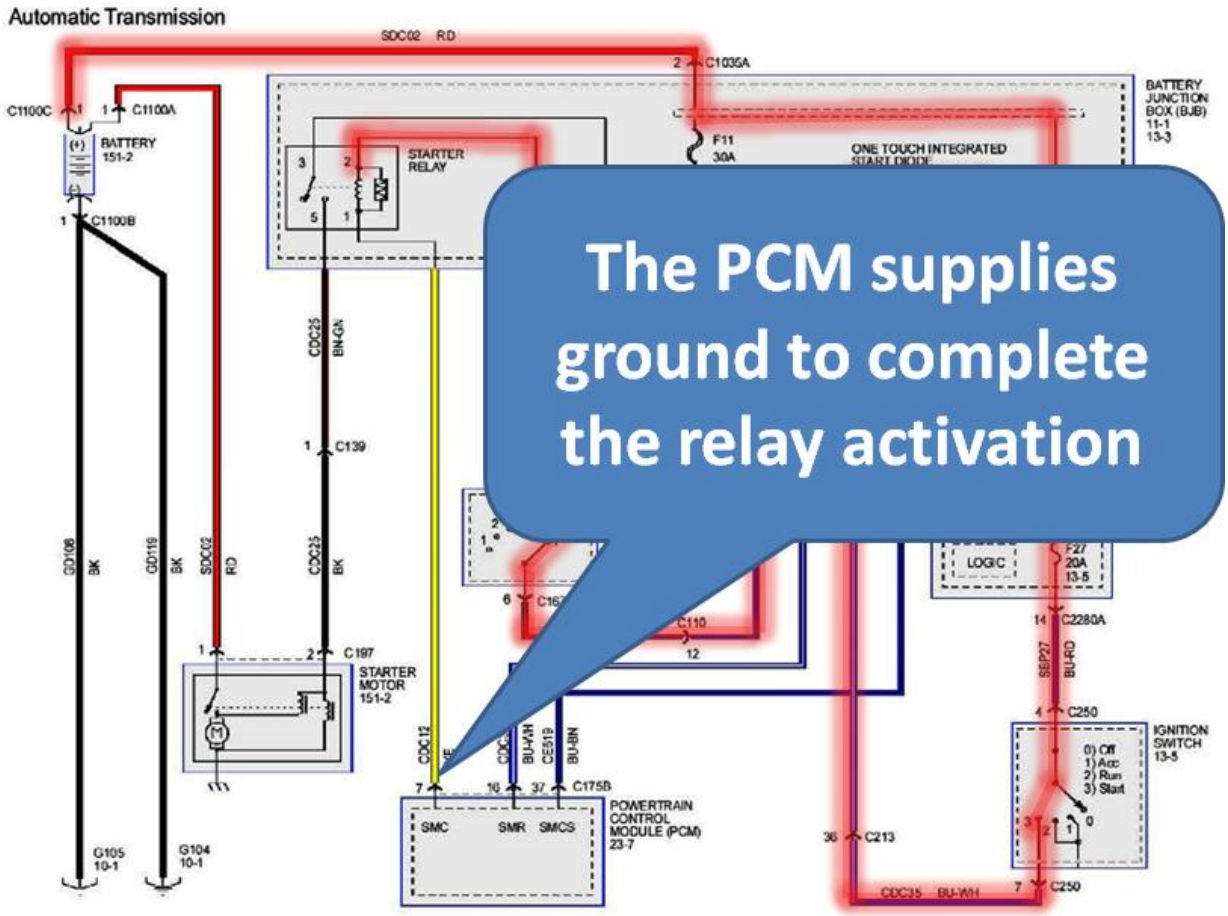

The PCM supplies the ground to complete the activation. Theft deterrent software may prevent the vehicle from starting if the correct key is not used. The security light will usually blink if theft deterrent is active.

How we start an area test?

The Problem; Starter does not engage, battery volts normal

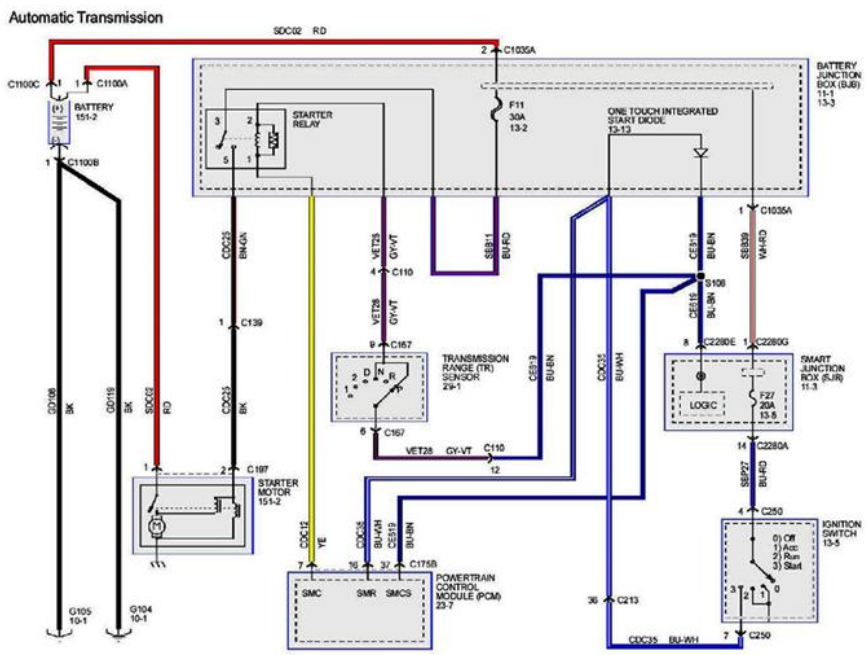

The security lamp on the instrument cluster must be off! Correct issues with the security system and possible communications problems. These systems can cause a no crank condition on vehicles.

Analyze the diagram

- There is no magic spot to start.
- If we select fuse F11, we test one part of the circuit, it is an important part

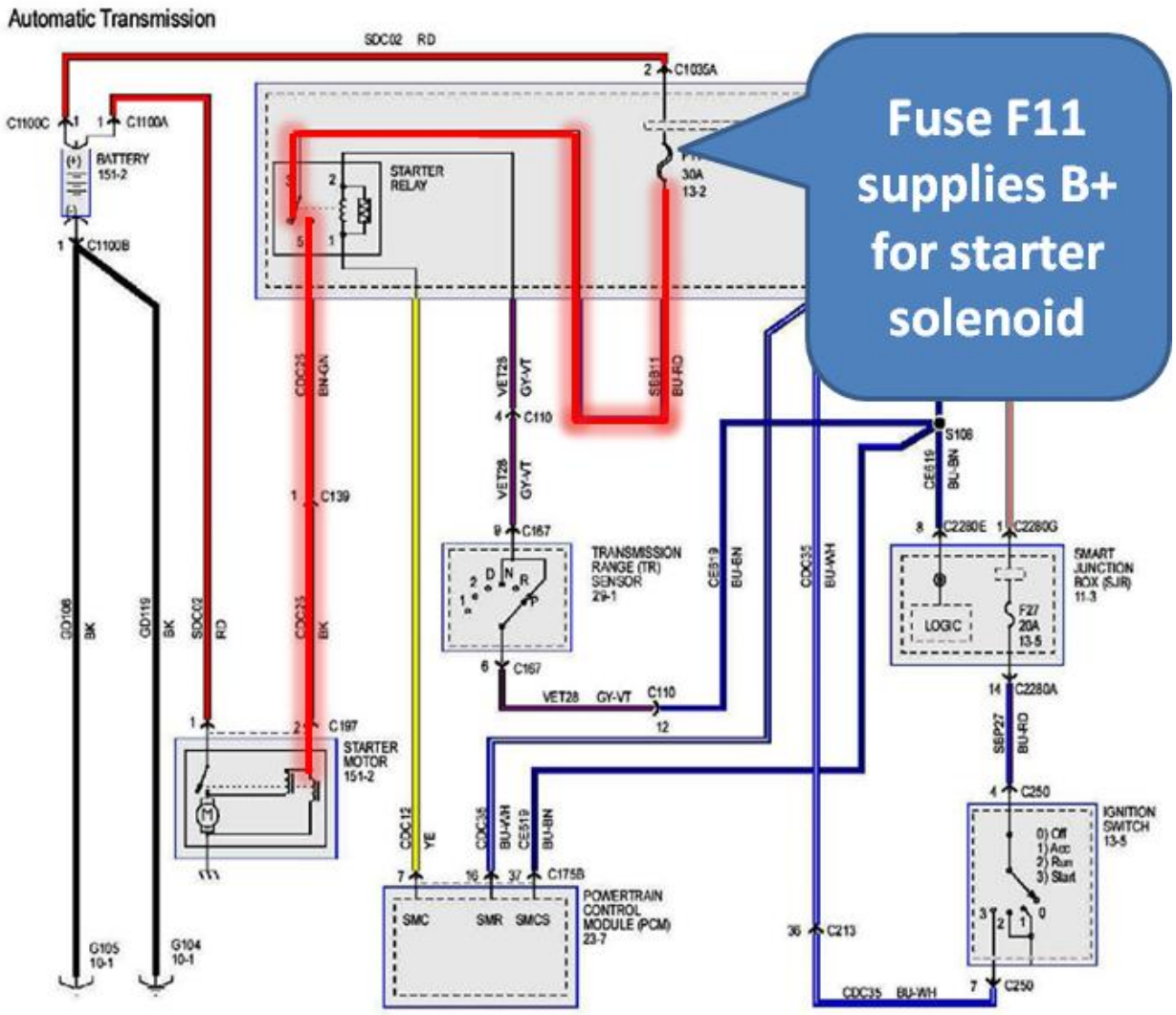

- If we select the starter relay, we can check four circuits
- One place to start is the B+ supply to the relay coil

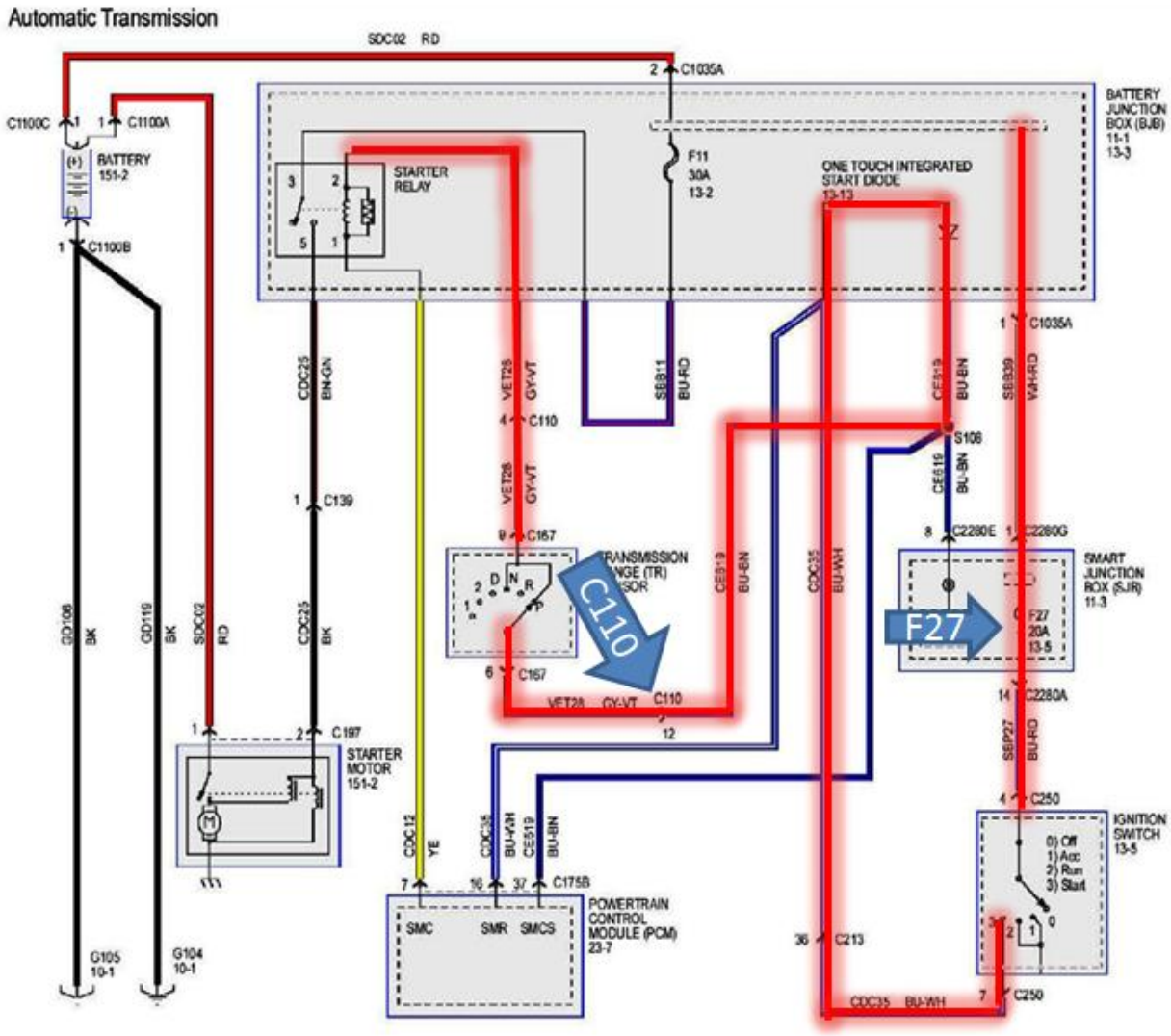

This example is for a starter relay that does not energize, this was determined as part of our area test. Try to identify a point where several tests can be done that will give you a diagnostic direction

- A normal reading indicates part of the circuit is normal
- An abnormal reading indicates the problem is in the portion of the circuit that serves that function

This one test checks the park-neutral switch, the ignition switch and fuse F27. A normal B+ reading with the ignition switch in the start position, the entire circuit is normal. An abnormal reading directs our diagnostics to this circuit as the most likely cause of the problem. We could check F27 since it is easy to reach, then we could go to connector C110; we divide the circuit into to two parts. A normal B+ reading would eliminate the ignition switch and the circuit up to C110. An abnormal reading indicates there is a problem between C110 and fuse F27, most likely

the ignition switch. Since we know B+ is abnormal at the starter relay, a normal reading directs us to the park neutral switch and its circuit.

Check the control circuit

- If B+ is normal, our diagnostic direction is to check the control side of the coil.
- The PCM supplies ground to activate the starter relay.

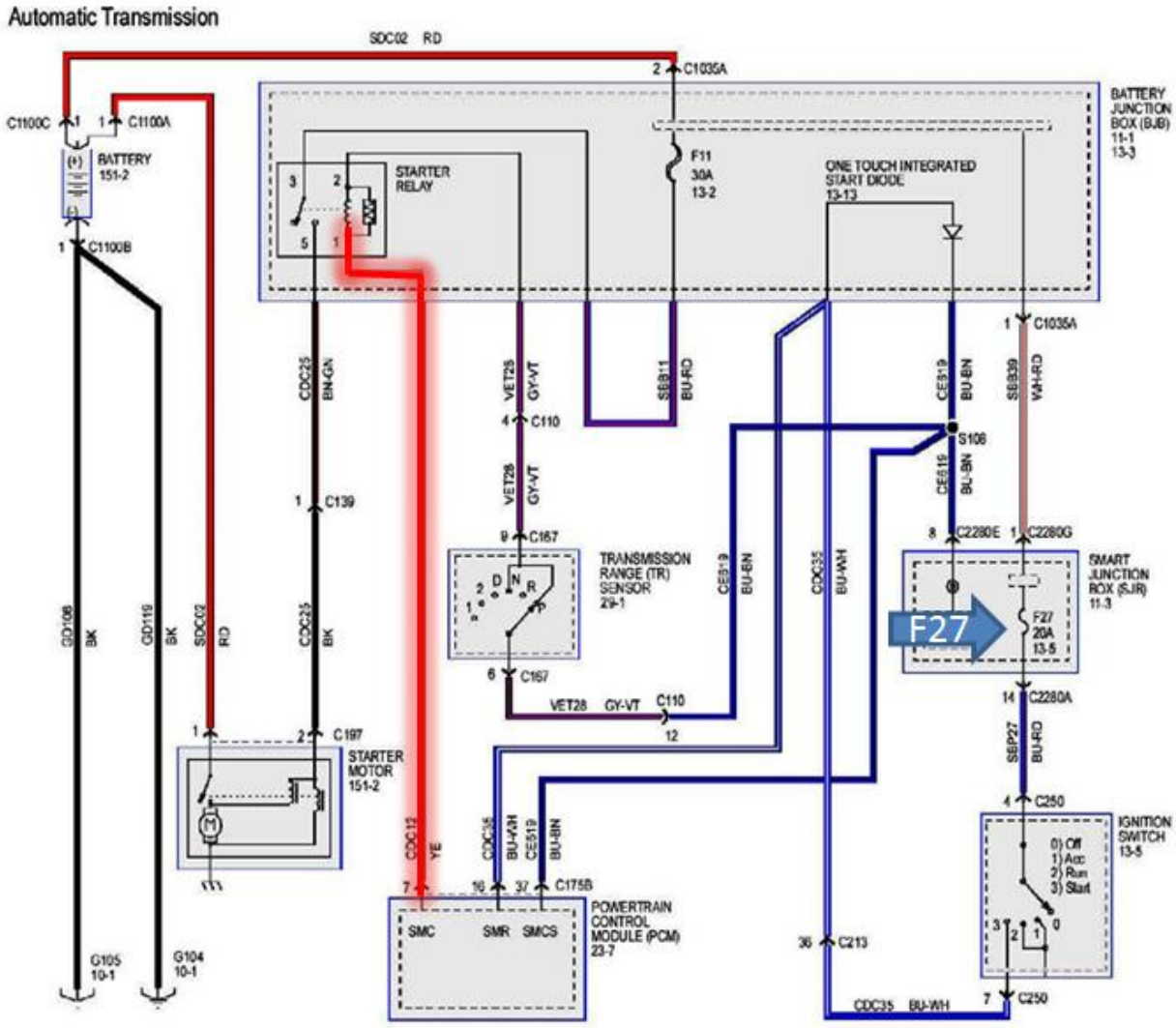

The PCM requires specific inputs to energize the starter relay. We have eliminated the security system earlier so it is a matter of the correct signals reaching the PCM. What signals does the PCM use to energize the starter relay?

Start signals to PCM

The PCM uses several signals to control the starter relay.

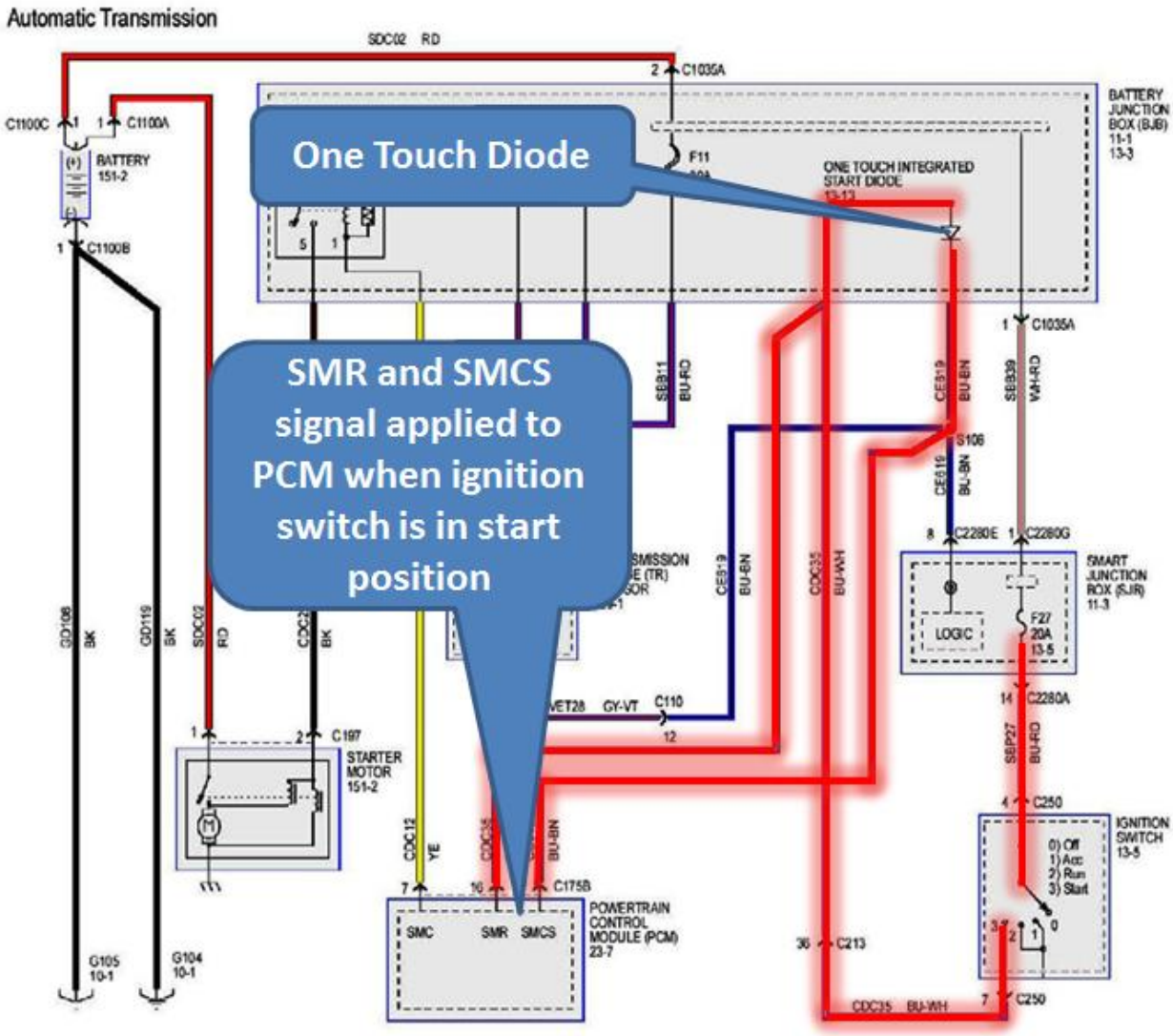

What signals does the PCM use to energize the starter relay? The SMR and SMCS signals are used to signal the PCM to energize the starter relay.

One touch operation

One touch completes the starting process after the ignition switch is in the start position briefly.

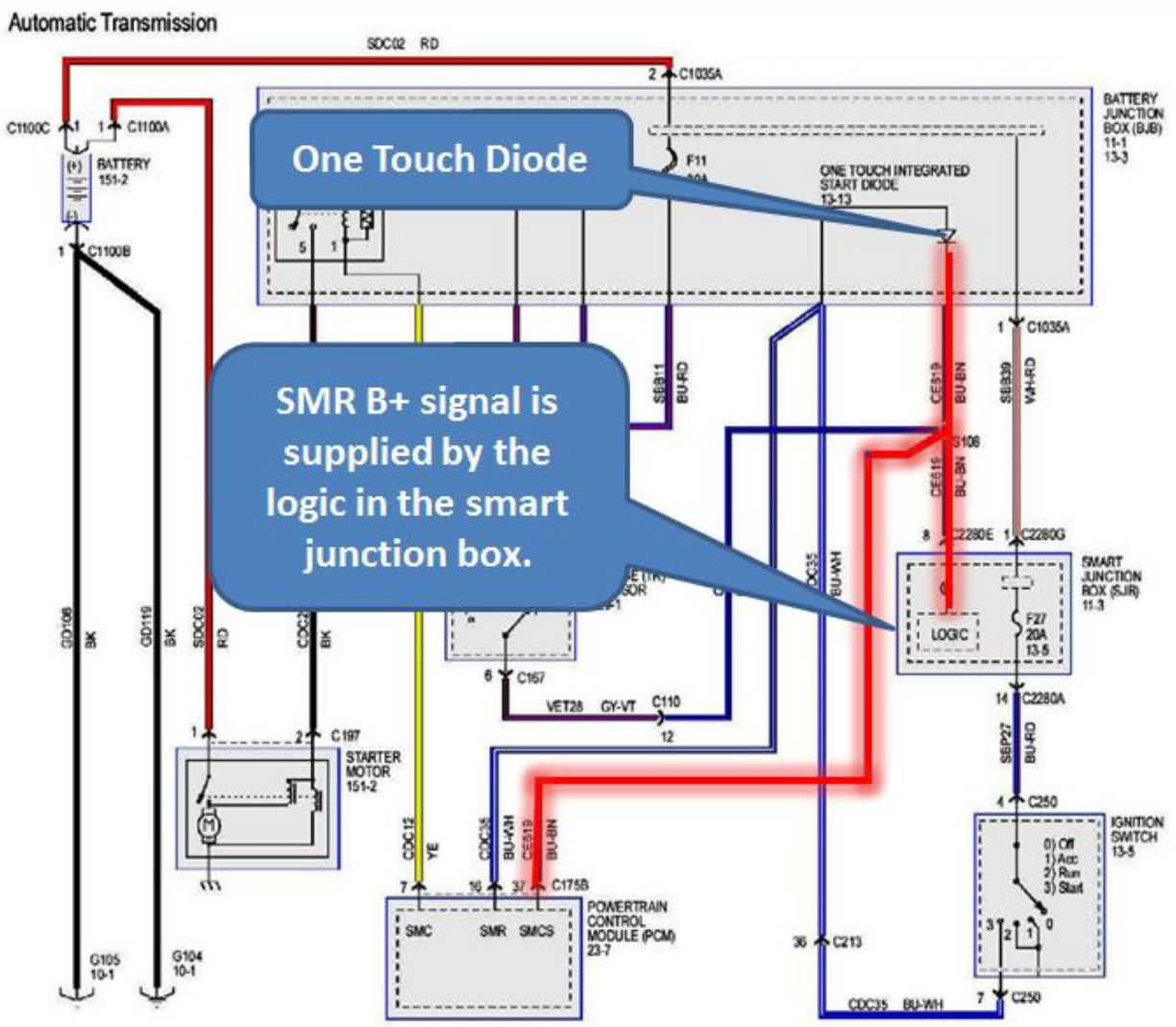

The PCM determines engine start and releases the starter relay. This is an example of the detailed knowledge that is needed to perform area diagnostics. OBDII has made area diagnostics easier by identifying problem areas with diagnostic trouble codes.

Power contacts

The power contact supply circuit and delivery circuits are the last two areas to test.

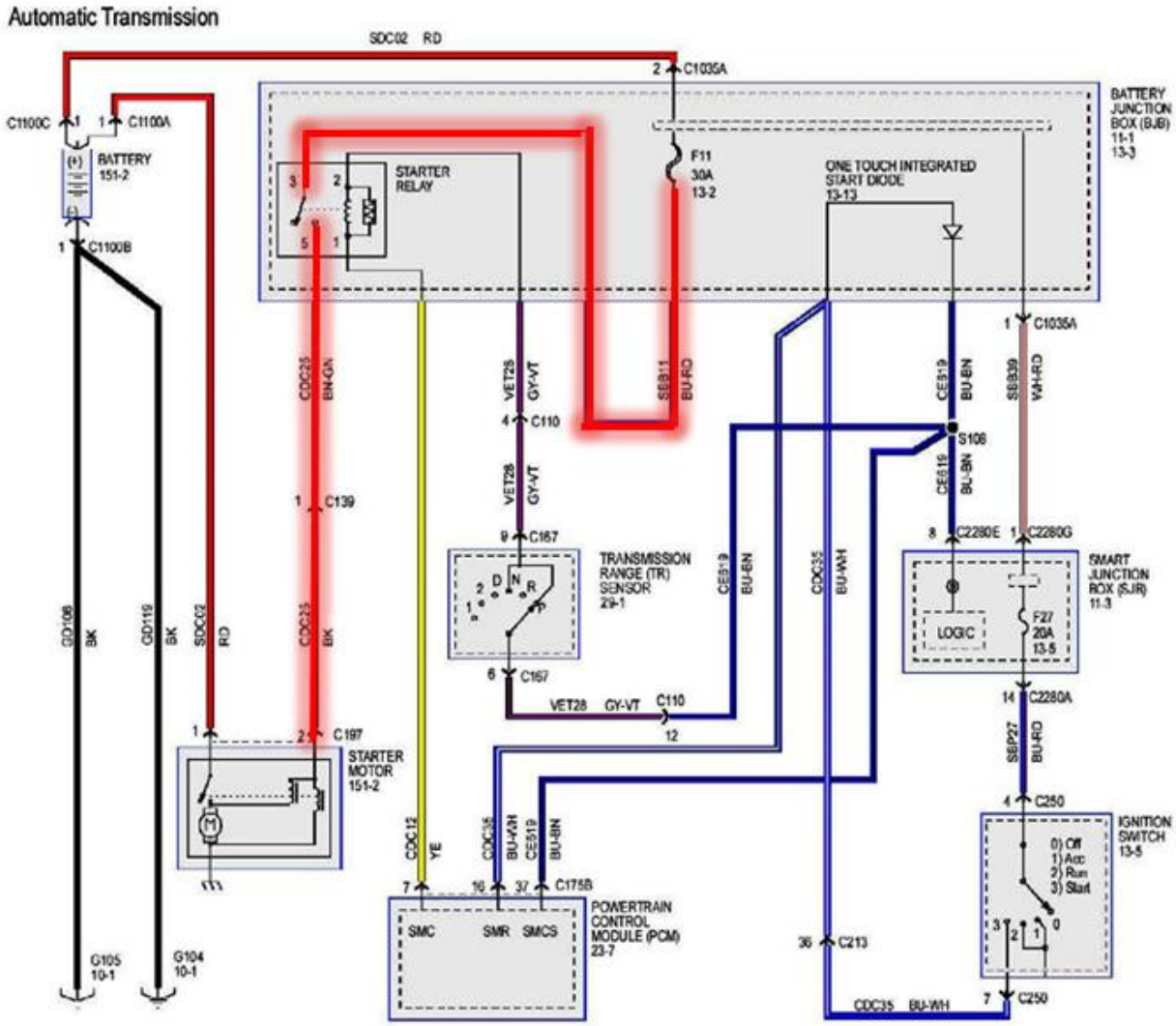

If the relay coil energizes, but the starter does not engage, check the B+ supplied by the power contacts. If B+ reaches the starter solenoid but the starter does not respond, the starter has a problem. Replace the relay if it does not switch B+ properly.

Electrically Testing DTCs:

Let's attempt to take a common diagnostic trouble code (DTC) and use the information we have discussed in the class up to this point. Using a simple late model vehicle we will pull diagnostic trouble codes and test from there. In this example ere using a 2008 Escape, but the vehicle isn't important, any one will do. We want to focus on the test procedures. Think of it has establishing a procedure for electrical testing. The vehicle has a four cylinder engine with the Malfunction Indicator Lamp (MIL) on. Using the scan tool you pull a P0171 DTC. The first step is to fine the description for the code.

System too lean bank 1:

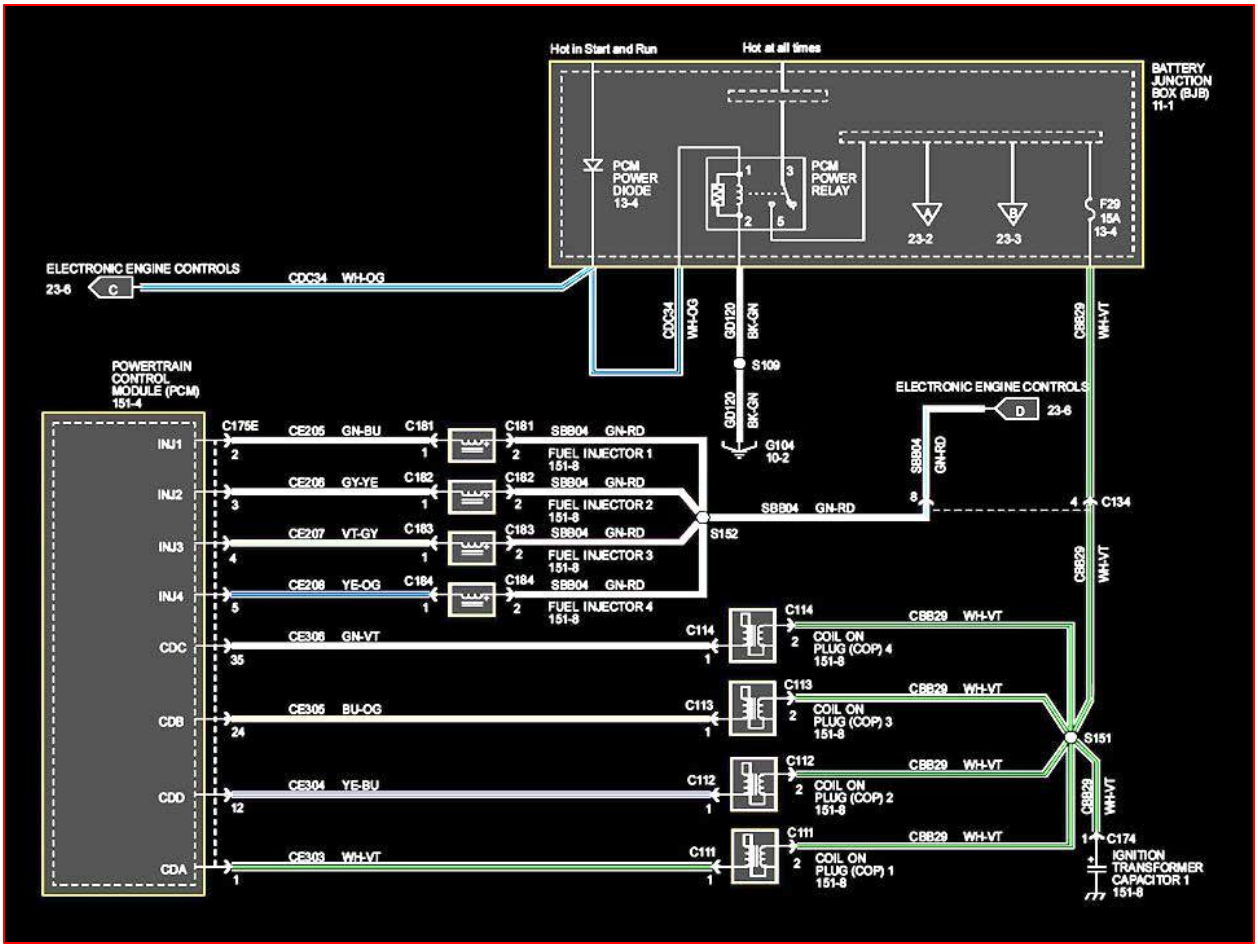

Lean is a condition of not enough fuel or too much air (vacuum leak). A vacuum leak doesn't allow electrical testing so we'll eliminate it a possible problem. Electrically we can test fuel injectors, fuel pumps and their circuits.

It doesn't matter where you start, you'll want a schematic.

We'll test the fuel injectors and then the fuel pump and their circuits.

Use your shops information system if you need information about the system's operation. Each one navigates differently but they all will supply us with a schematic and information.

The search for a schematic on the PCM yielded 7 schematics. We wanted one with all of the information on it but that didn't happen. Don't get frustrated, if everything was on one page it would be confusing and jumbled. Remember, you get what they give you, nothing more or less.

The first schematic shows us the fuel injectors and ignition coils. These are common components that require testing. The ignition coil's control circuits are going to the PCM with the only connector showing is the one at each coil. The power to the ignition coils shows connectors at each coil, experience tells us that it is the same connector for the control wires. But it doesn't show us that in the schematic. We also see a splice that connects all of the ignition coil's power to one wire going to the battery junction box. There we see the power is supplied through a 15 A fuses marked F29. We do not have that amount of information for the fuel injectors. The schematic shows the control side going to the PCM, but the power supply stops at a tab marked C23-6. That indicates where the power supply comes from; we have to go there to check for missing voltage. On the related 23-6 schematic it shows that the fuel injectors receive power from the fuel pump relay in the battery junction box through a 20 A fuse marked F4. Knowing where the fuel injectors get their power and ground were ready to test them.

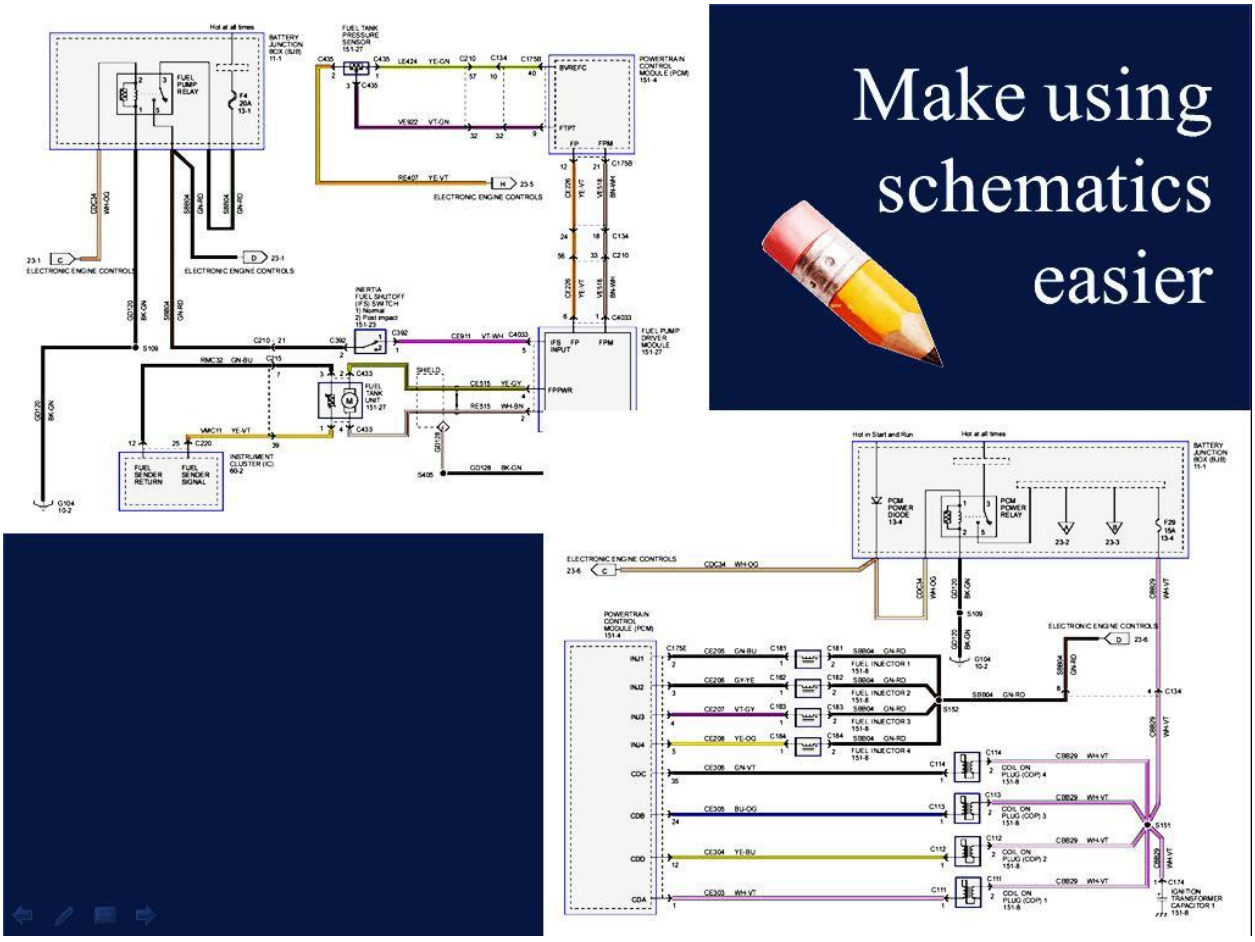

Many of us struggle with reading a schematic. They understand the symbols, how to do it, but they become overwhelmed. So make it simpler by redrawing it. Draw it the way you see it. The only rule is, don't leave anything out. To test the fuel injectors, what do you need to know? Draw it in there. Basically, we need wire colors. If you have never tested fuel injectors before draw in powers and grounds so that when at the vehicle you have enough information. The grounds are what the PM uses to control the injectors. You will want to connect the digital storage scope (DSO) to the control (ground)
side.

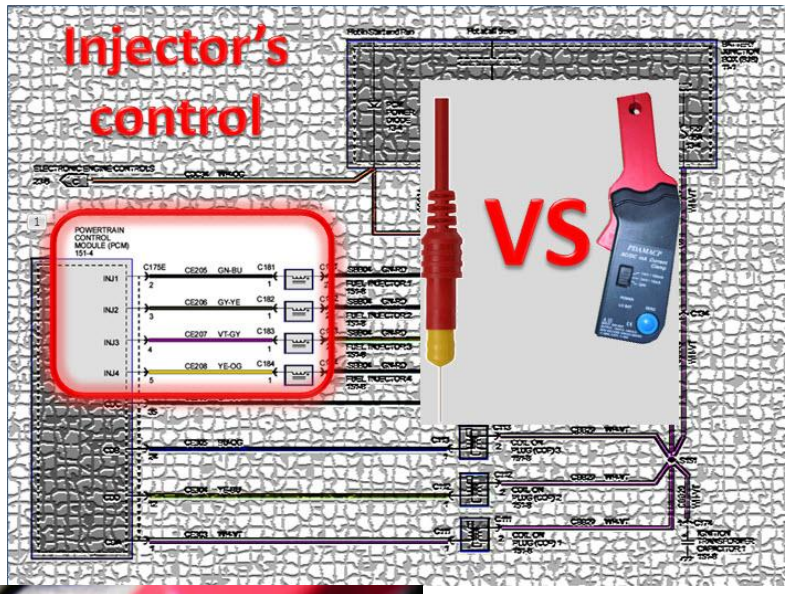

Voltage versus current

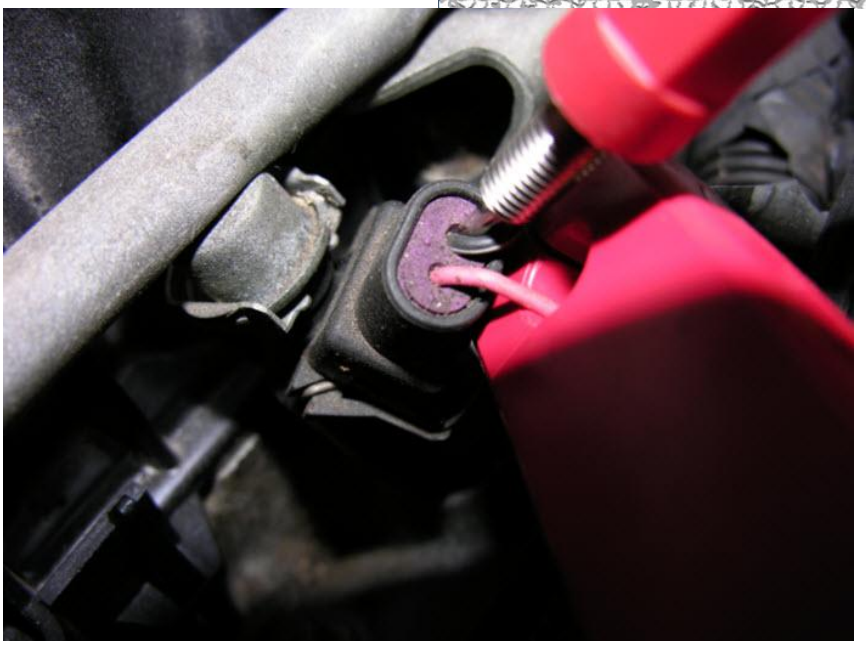

Test connections;

There are two procedures for testing fuel injectors. Use voltage or a current. Each waveform will give information about the injector and its circuit. This comes down to preference. Which one do you want to do? Bill and I usually go after both of the waveforms, voltage and current. It makes sense to us that while were at the injector making a test connection, why not connect both the voltage and the current probes.

Injector waveform;

Fuel injector testing:

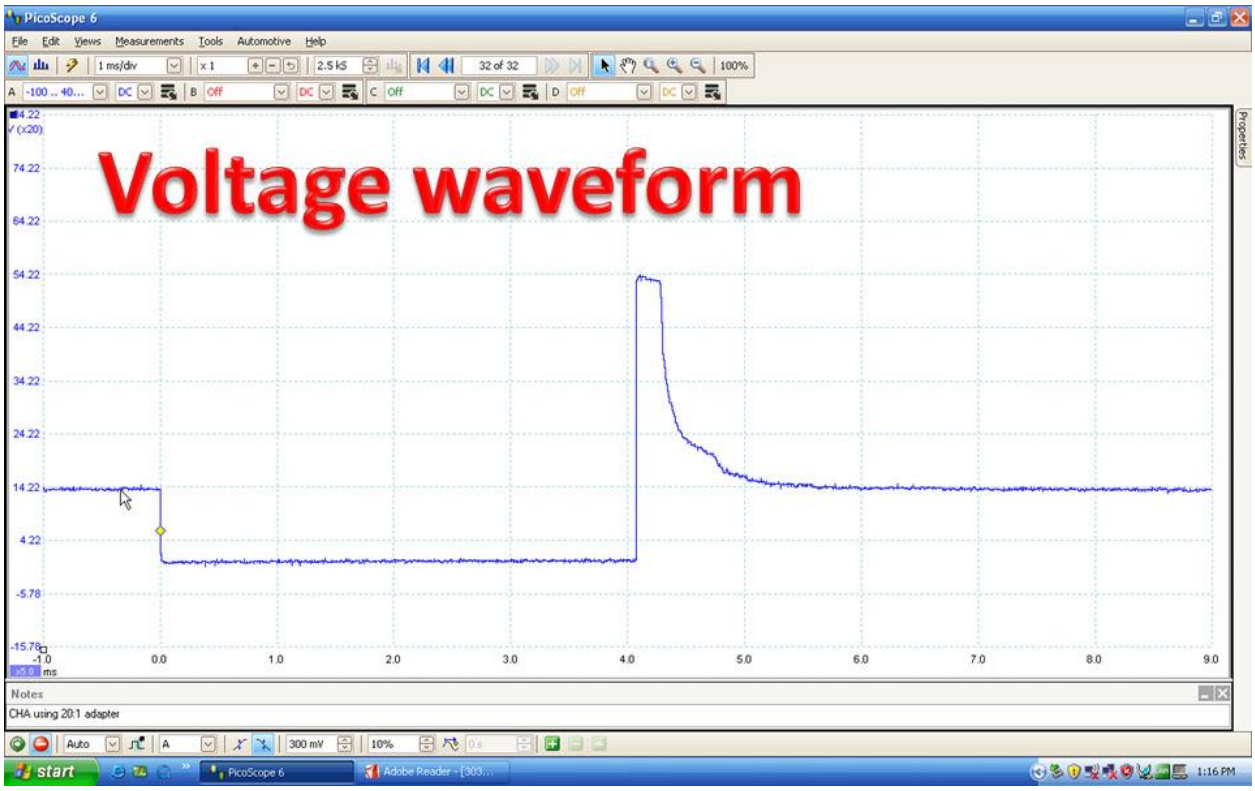

The voltage waveform supplies us with information about the injector's power, ground, and the injector's windings. In some waveforms we can see the pintle hump when it closes. The part of the waveform that displays the charging system voltage should be within 0.50 volts of the charging system voltage. All most always we see it within a few 10 s of a volt. If it isn't normal, you will need to diagnose the circuit between the fuel pump relay and the injector. If that isn't normal test the relay itself. If the relay is ok then test the power and ground for it. Each section of the circuit may require a different schematic. The ground voltage should be under 0.40 volts. It is a computer ground and is different from other grounds we have discussed. If the voltage is too high on the control (ground) side of an injector take a look at the other injector grounds. You're looking to see if all the injectors have a bad ground or just one. If all of them have a bad ground, measure the grounds for the PCM. The PCM's job is to supply a ground for the injector (solenoid) to complete the circuit, creating a magnetic field strong enough to pull a pintle off its seat so that fuel can flow through. To supply a ground it must have a good ground. Computer grounds should be less than 0.05 volts. The inductive kick after the PCM releases the injector's ground tells us about the injector itself. It is a solenoid made with a long wire wrapped around so that magnet field can be created when it is grounded. The magnetic field will collapse into the winding when the circuit is turned off. This induces voltages into them and gives the inductive kick. The kick is represents of the conditions of the windings. Each manufacture designs injectors differently even between its models. A specification can be found in looking at the other injectors on the engine you're working on. Compare them and it will be the odd injector out.

Ground voltage

The PCM only grounds the injector momentarily. It doesn't pull the voltage to ground and hold it there for the entre injector pulse width. Changing the DSO's voltage range to a much lower voltage allows us to zoom in on the waveform. The example in the insert is using a half of volt

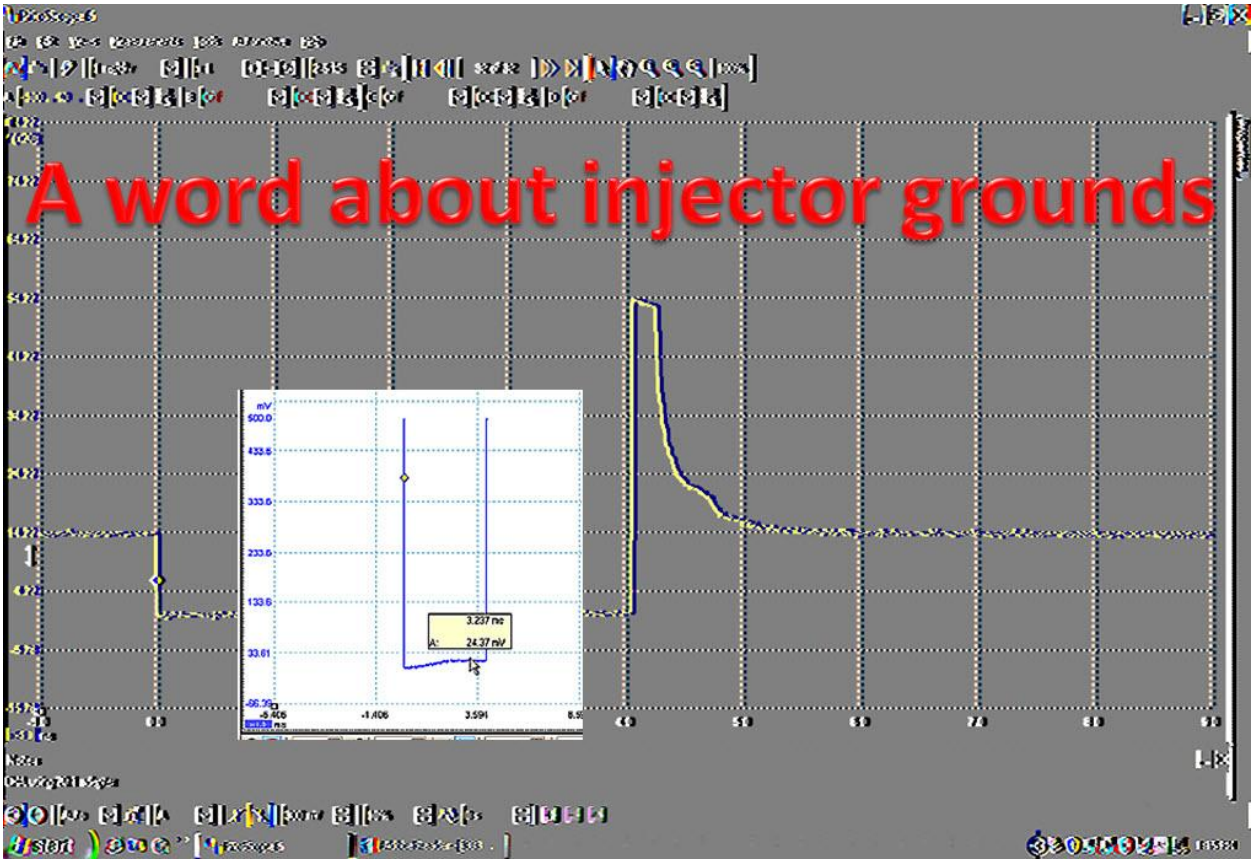

scale. Read the waveform from left to right. The injector is grounded and almost instantly the voltage starts to rise. This is a good, normal injector ground pattern. The PCM is bringing the voltage down to 287 mv, which is normal.

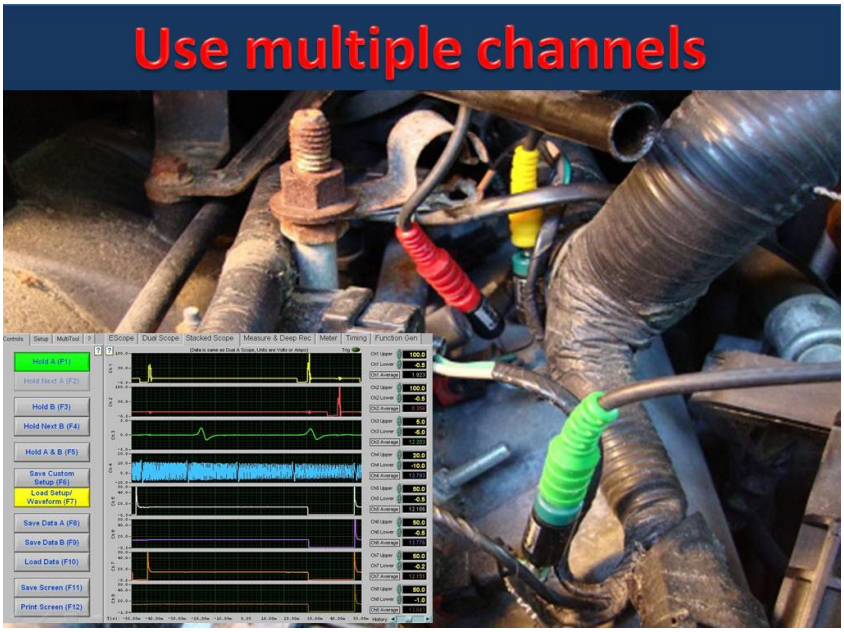

All injectors can be displayed by using DSOs with multiple signal channels. Some DSOs have multiple channels that can display up to 8 signals at one time. These waveforms show the 4 injectors and additional information. Many DSOs

are 4 channel scopes and allow the user to compare different signals.

Injector current testing:

What more could you want? Think back to I = E ÷ R. That told us that current is a product of resistance and voltage. The voltage gave information about power to the injector, its ground voltage, and the voltage that it's winding could produce, but nothing about current. It could be assumed that if the voltage was normal, and the winding resistance was correct, the current must be correct. Producing the right amount of induced voltage means the resistance of the winding is normal. Or the resistance could be measured with an ohmmeter. Using an ohmmeter to measure the resistance of an injector will miss a large percentage of bad injector. The resistance may be normal when measuring it. To measure the Ohms the component must be off or disconnected



from power. Resistance may measure correct statically (no power through it) but would fail dynamically (power going through it). Many technicians continue to rely on resistance testing for injectors, but we guarantee that they are missing bad ones. If you want to know how much current the injector is drawing, measure it.

Current can be measure non-intrusively by simply clamping the probe around the conductor. This makes testing quickly without breaking the circuit. On some circuits voltage offers not enough information on what is going on. As an example a voltage measurement on a fuel pump doesn't tell us about the performance of the pump. Also the current tells us when work is being done in a circuit. When testing an actuator (Solenoid) if we see current flowing then work is being done.

Low amp probe considerations:

Connection selection:

Positive or Negative In some circuits like a series circuit it doesn't matter is the probe will measure the current the same. In a parallel circuit you need to be more selective where the probe is placed. If it is placed in a common part of a circuit it will measure all of the current passing through all of the components.

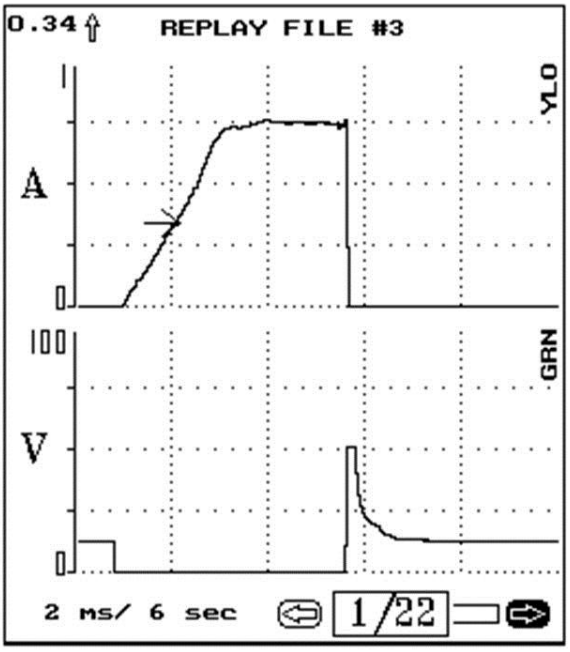

Adjusting zero: Probes have different zeroing procedures. Some have a button that is pressed and others have a knob to turn. However your probe zeros, remember to not have it connected to a circuit when zeroing it.

Degauss the probe (open and shut jaws a few times): The probe is a Hall Effect sensor and uses magnetism. Degassing the probe means to dissipate any magnet field that may have built up on it.

Place the probe near test point: Don't connect the probe until you place it around the area it is going to be used in. Watch the DSO's or the DVOM display to see if the probe is picking up any noise. If the probe is picking noise reposition it to another area. If that isn't possible, use tin foil to shield it from the noise.

Orientation or polarity:

If the pattern is upside down or the DVOM display has a negative symbol in front of the value, turn it around so that the current flows through it the other way.







If the DSO you're using doesn't have a low amp probe function you will have to set the probe up in order to use it. The Fluke probe has 100 mV per amp and 10 mV per amp settings. These settings indicate that, this much voltage coming out of the probe is equal to this many amps. The

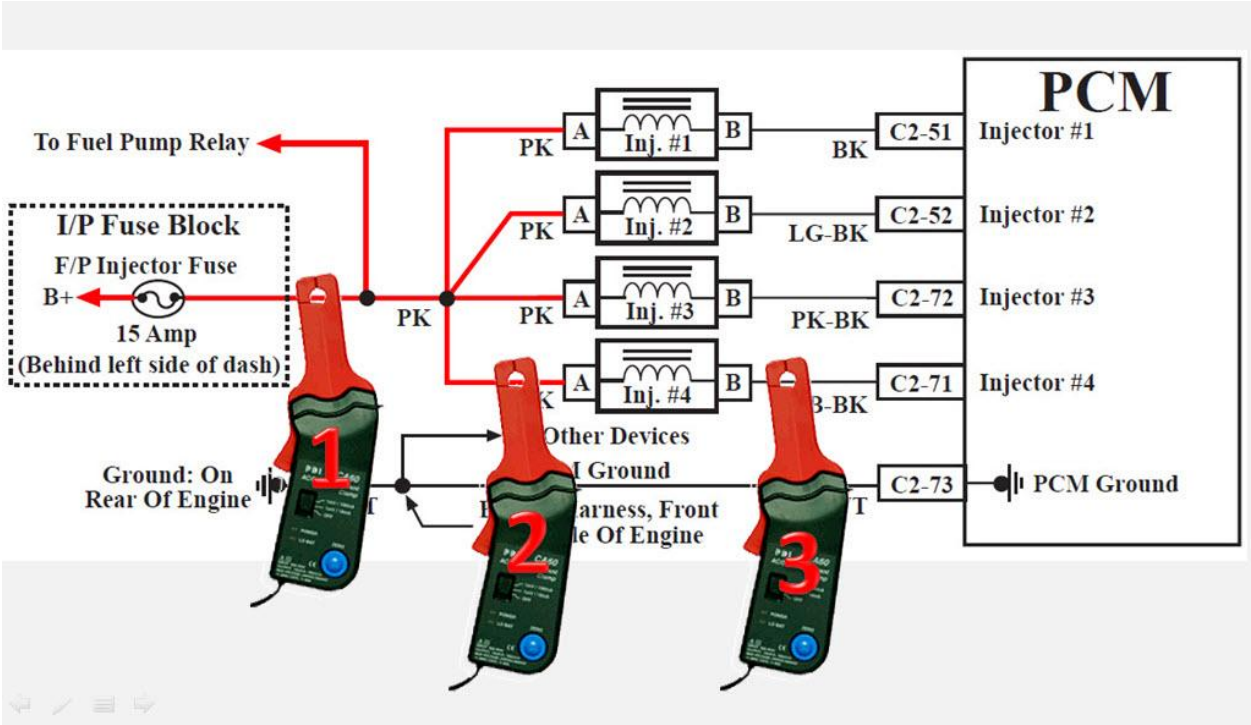

DSO is looking for a voltage reading and that is what the probe sends. The 10 mV setting has 10 mV equaling 1 amp.

On the other probe 1 mV equals 100 mA or 10 mV equals 1 amp. The other setting is mV equals 10 mA or 100 mV equals 1 amp. A general rule is to use the lowest amp setting or the setting with the highest voltage which will be the highest resolution.

Low current probe position

The probe may be positioned in different parts of the circuit to measure all of the injectors or just one injector. The probe may be placed on the positive or negative side of the injector. Probe #1 would measure the current going through all of the injectors, and the DSO's screen would display a pattern for each one. Probes #2 and #3 would measure the current for that injector only and only one injector pattern would be display.

Voltage and current waveforms

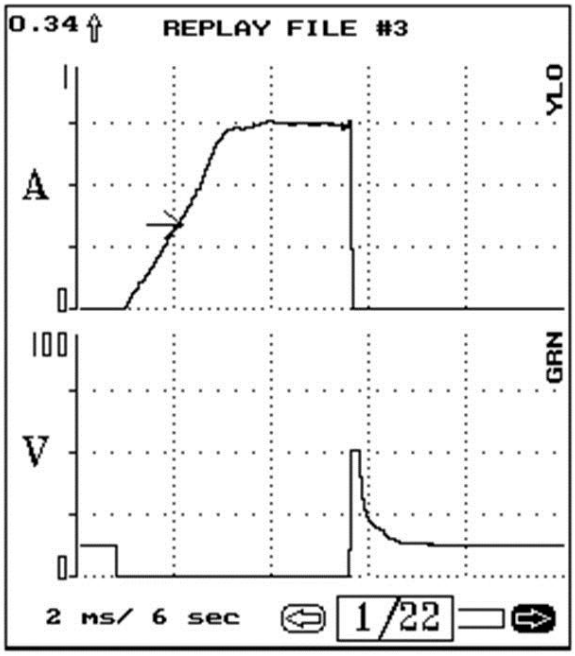

Injector Current Waveform:

The injector's current waveform shows the current draw of the injector and the pintle movement. Viewing the voltage and current waveforms together gives the most complete information available to the technician. In the voltage the inductive kick indicates the condition of the injector's windings just as current flow does. In both we see the injector being turned on and off cleanly without any electrical noise. Current shows the pintle hump in the raising edge and voltage shows it in the falling edge. Looking at both waveforms together we see as the ground is supplied to the injector's circuit, current raises and voltage falls. When the ground is released, current falls and voltage raises.

Fuel Pump Testing:

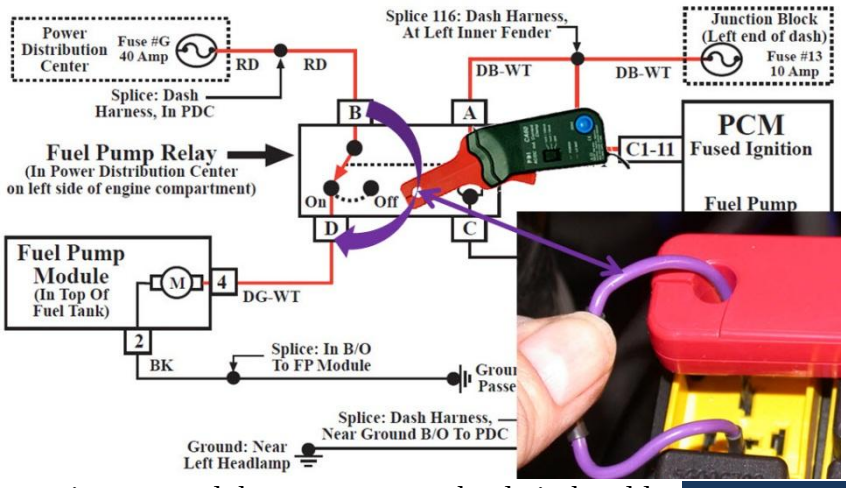

Since the DSO is already out, let's test the fuel pump's pressure and volume. Fuel pressure is directly related to current flow. Volume is directly related to the fuel pump's RPM. Both can be measured with a DSO. There are technicians that don't use a pressure gauge any more. All of their fuel pump testing is done with a DSO and or an ammeter. With current telling us about voltage, resistance, and the component, why do it the old fashion way? At the research center we do it both ways. Sometimes it is just easy to connect the pressure gauge and get it done quickly. Fuel pressure testing doesn't tell us everything about the pump and its circuit but sometimes it's good

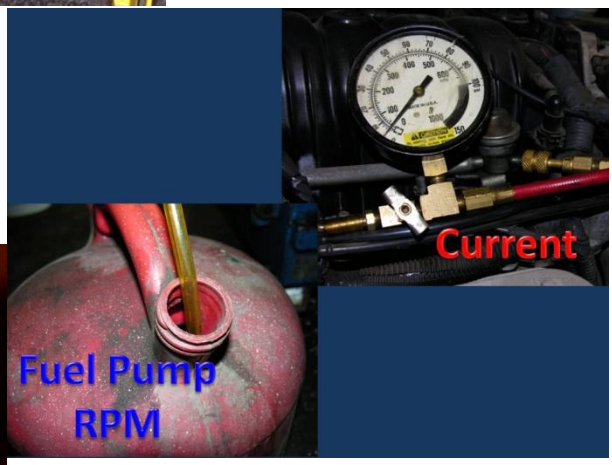



enough. The current indicates the overall condition of the pump. Excessive current draw means the pump is working too hard (Lower than normal RPM). Lower than normal current indicates that the pump isn't doing enough work (Higher than normal (RPM). Analyzing the waveform indicates the overall condition of the brush to commentator contact (1 amp max Peak to Peak)

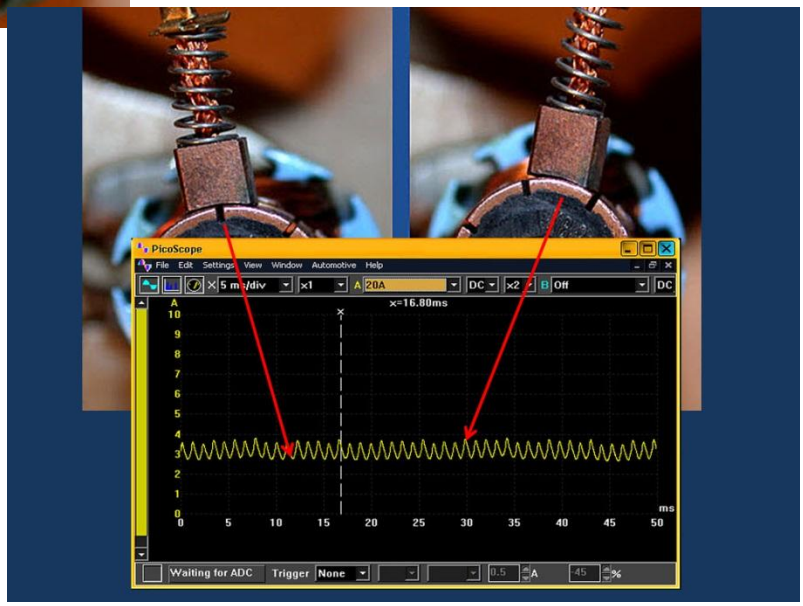

The wave form looks like it does because of the contact the each brush makes with the each commentator. This image shows that the brush is straddling two commenter bars increasing resistance. When a brush is in this position current falls slightly, causing the waveform to dip a little. The second image shows the brush is

in full contact with one commentator bar decreasing resistance. When a brush is in this position current goes up a little and the waveform rises slightly.

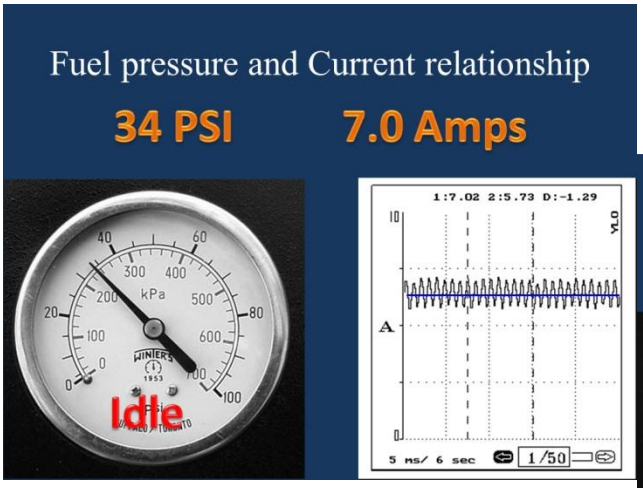

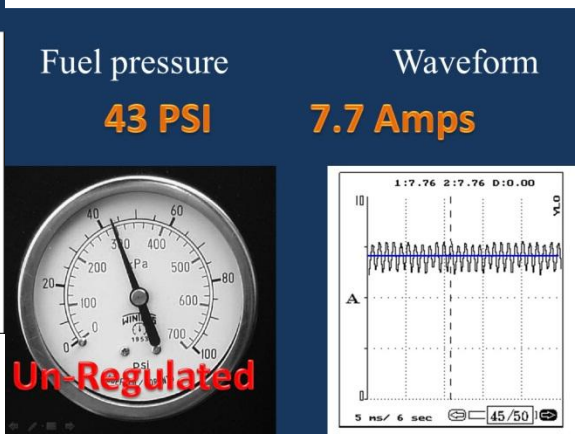

As the pressure increases current also increases. They are proportionally related to each other. The three pressure gauges show:

1. Idle pressure at 34 PSI and 7.0 amps.
2. Un-Regulated (vacuum hose removed at 43 PSI and 7.7 amps.
3. The third gauge shows dead head pressure at 76 PSI and 9.6 amps.

The line through each waveform shows the average current draw.

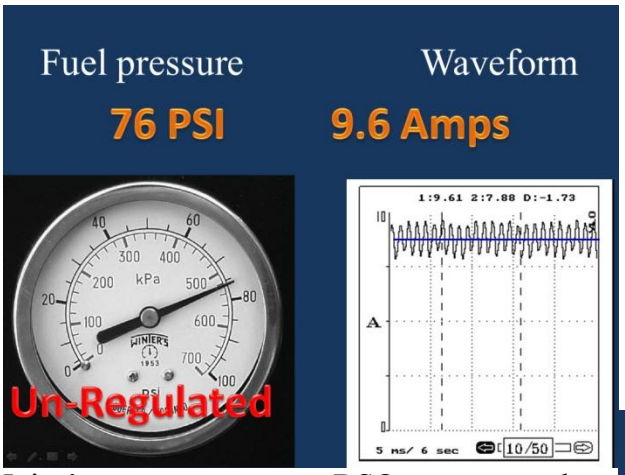

It isn't necessary to use a DSO to measure the current draw of a fuel pump. If all you want to do is measure current the DVOM works fine. The connection point of the amp probe is the same as the DSO. If you are going to measure the fuel pumps RPM and look at the overall condition of the pump the DSO is required.

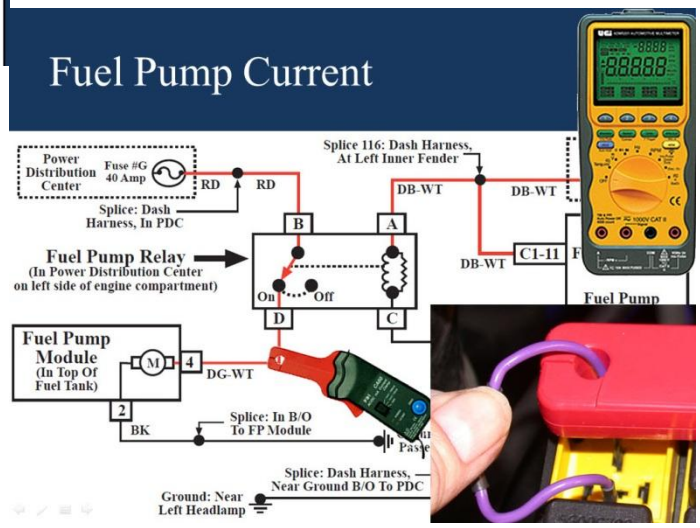

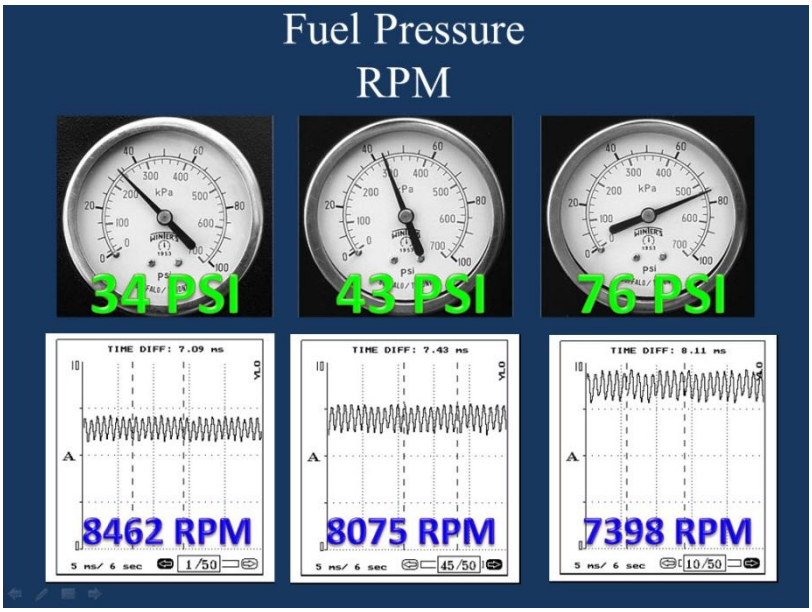

The RPM and current are inversely proportional to each other. The RPM decreases as the pressure increases. This is because the pump works harder to deliver more fuel. When the internal parts of a pumps begins to wear out it moves less fuel (less work) so it can rotate at a faster RPM.

To measure the fuel pump's RPM, freeze the waveform on the screen. Look for a repeating pattern (hump). Every time a bush makes contact with a commentator bar there is a distinctive pattern created. That hump repeats every time that bush makes contact with that bar.

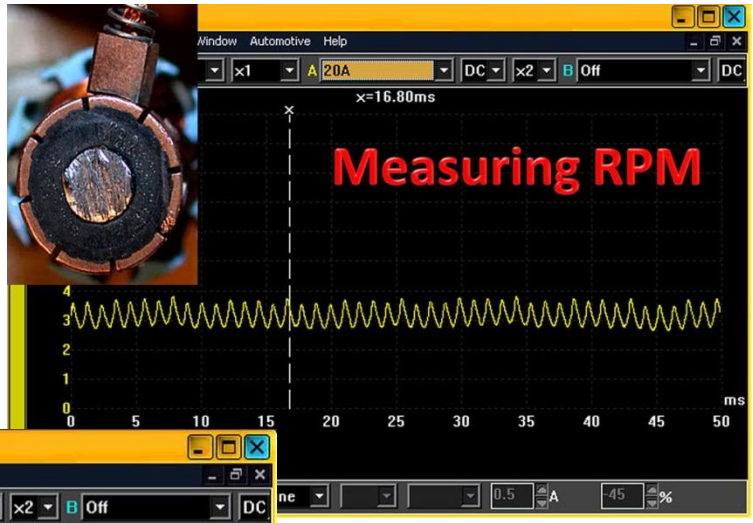

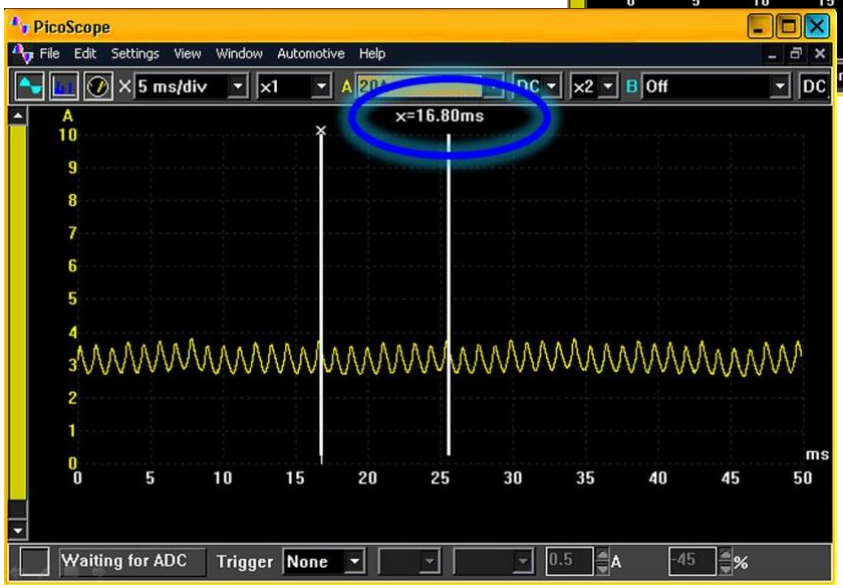

There are 60,000 milliseconds in 1 minute. That becomes the constants in the calculation. Divide 60,000 by the amount of time, in milliseconds, it took for 1 revolution (1 RPM) of the fuel pump. Our example shows us that it took 16.80 ms for the pump to go around 1 time. The calculation becomes 60,000 ÷ 16.80 = 3571 (RPM).

Work the pump and look for intermittent problems. Start & stop the pump several times while watching the waveform. This may allow for any intermittent problems to show up.

Work the pump by starting & stopping it several times, while watch the waveform.

The pump may have an intermittent problem you can catch.

The vehicle's battery and the charging system are the two sources for EMF (voltage). Manufacturers design their charging systems differently which makes it a huge subject which makes it a huge subject.

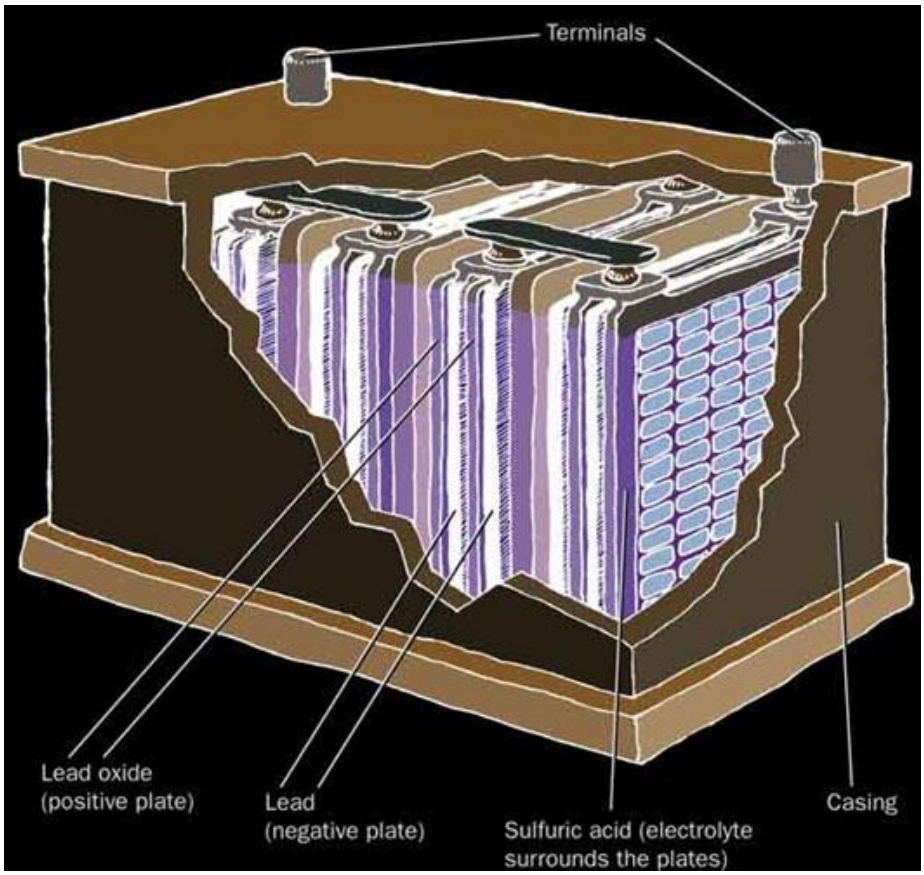

Batteries:

The commercial use of the lead acid battery is over 100 years old. The same chemical principal that is being used to store energy is basically the same as our Great Grandparents may have used.

The Lead Acid battery is made up of plates, lead, and lead oxide (various other elements are used to change density, hardness, porosity, etc.) with a 35% sulfuric acid and 65% water solution. This solution is called electrolyte, which causes a chemical reaction that produce electrons. When you test a battery with a hydrometer, you are measuring the amount of sulfuric acid in the electrolyte. If your reading is low, that means the chemistry that makes electrons is lacking something. So where did the sulfur go? It is resting on the battery plates and when you recharge the battery, the sulfur returns to the electrolyte.

Batteries are assembled from cells, connected in series, to increase the voltage available. In a cell, chemical energy is converted into electrical energy. The voltage generated by the chemical reaction between the plate material and electrolyte is approximately 2.1 volts per cell. The percentage of acid to water in the electrolyte can affect battery voltage and specific gravity. Never add acid to a battery to top it off.

SLI battery:

Starting, lighting, and ignition SLI is a term to describe a standard battery. It is designed to provide initial starting power to the engine's starter motor for cranking. It provides energy to the electrical system when the engine isn't running. When power demands are greater than the charging system can provide the battery supplies power. It acts as an electrical system buffer by smoothing voltage surges when loads are turned on or off. It absorbs voltage spikes when the ignition is turned off. It also acts as a buffer by stabilizing charging system voltage.

AGM battery:

The Absorbed Glass Matt construction allows the electrolyte to be suspended in close proximity with the plate's active material. In theory, this enhances both the discharge and recharge efficiency. Common manufacturer applications include high performance engine starting, power sports, deep cycle, solar and storage battery. The larger AGM batteries we sell are typically good deep cycle batteries and they deliver their best life performance if recharged before allowed to drop below the 50% discharge rate.

GEL battery:

The Gel Cell is similar to the AGM style because the electrolyte is suspended, but different because technically the AGM battery is still considered to be a wet cell. The electrolyte in a Gel Cell has a silica additive that causes it to set up or stiffen. The recharge voltage on this type of cell is lower than the other styles of lead acid battery. This is probably the most sensitive cell in terms of adverse reactions to over-voltage charging. Gel Batteries are best used in VERY DEEP cycle application and may last a bit longer in hot weather applications. If the incorrect battery charger is used on a Gel Cell battery poor performance and premature failure is certain.

CCA, CA, AH and RC battery ratings;

Cold cranking amps **(CCA)** is a measurement of the number of amps a battery can deliver at 0 ° F for 30 seconds and not drop below 7.2 volts. So a high CCA battery rating is especially important in starting battery applications, and in cold weather. This measurement is not particularly important in Deep cycle batteries, though it is the most commonly 'known' battery measurement.

CA is cranking amps measured at 32 degrees F. This rating is also called marine cranking amps **(MCA)**. Hot cranking **amps (HCA)** is seldom used any longer but is measured at 80 ° F.

Reserve Capacity **(RC)** is a very important rating. This is the number of minutes a fully charged battery at 80 ° F will discharge 25 amps until the battery drops below 10.5 volts.

An amp hour **(AH)** is a rating usually found on deep cycle batteries. If a battery is rated at 100 amp hours it should deliver 5 amps for 20 hours, 20 amps for 5 hours, etc.

Conditions causing difficulties in charging a Battery:

Short Circuit – Positive and negative plates make contact. A defective porous separator or vibration damage is the usual conditions for the contact. This will cause the battery to self-discharge creating high resistance sites or major internal damage if the short circuit is extensive.

Open Circuit – An open circuit is caused by a disconnected cell or post. No current can pass through the battery and there is no voltage at the terminals. The battery does not charge or accept testing. The source of open circuit could cause internal sparks that would result in an explosion in the battery.

Dead Worn Out Cell – The loss of active material from the positive plates creates this condition. The active material lost from the plates fills the sediment chamber or the bottom of the envelope separator and forms a possible connection or short at the bottom of the plates.

Sulphated Battery – A battery that has remained in a discharged state for an extended period of time will cause the lead Sulphated present in the positive plate to crystallize and resist a charging current required to that would drive the ions back into the acid solution.





Battery Packaging

Batteries are made from a group of cells. An example is the common 9 volt battery which is made up of six 1.5 volt cells. The AA and the AAA batteries are 1 cell batteries. The difference is the size of each battery. Different sizes for different applications. All automotive batteries are not the same size or shape.

State of Charge of a Battery:

The state of charge is dependent on battery temperature. Battery temperature can be assumed to be the same temperature as the engine compartment. It is best to measure the battery's temperature to ensure the accuracy of the test.

State of Charge

State of Charge	Specific Gravity	Voltage 12V
100%	1.265	12.7
*75%	1.225	12.4
50%	1.190	12.2
25%	1.155	12.0
Discharged	1.120	11.9

Sulfation starts when specific gravity falls below 1.225 or voltage is less than 12.4 for a 12v battery

The load capacity decreases as the state of charge decreases. The specific gravity of the electrolyte, a load test, and measuring the Conductance are three tests for determining the state of charge.

A specific gravity measurement requires that the vent caps be removed.

The load test requires a load tester.

The conductance test requires a conductance tester.

Battery Temperature:

Chemical activity slows when the battery is cold. Adjustments must be made to compensate for battery temperature during testing. Use the chart so that you test a battery correctly.

LOAD TEST

Electrolyte Temperature °F	Electrolyte Temperature °C	Minimum Voltage Under LOAD
100°	37.8°	9.9
90°	32.2°	9.8
80°	26.7°	9.7
70°	21.1°	9.6
60°	15.6°	9.5
50°	10.0°	9.4
40°	4.4°	9.3
30°	-1.1°	9.1
20°	-6.7°	8.9
10°	-12.2°	8.7
0°	-17.8°	8.5

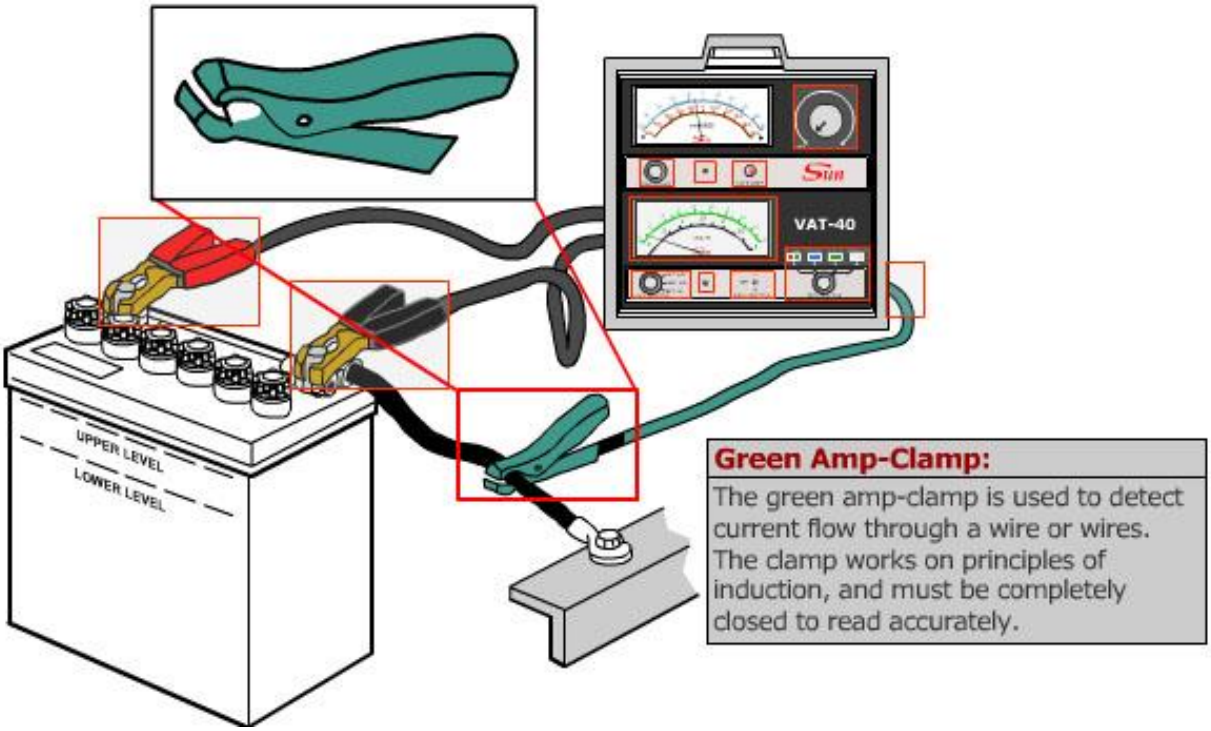

Connect the load tester as instructed in the tester's manual. Apply the load and observe the results.

The basic procedure is to:

1. Charge the battery if open circuit voltage is 12.4 or less.
2. Apply a load to remove the surface charge.
3. Apply the load and observe the voltage at the end of the test.
4. Compare the results to the chart.
5. If the battery's voltage falls below 9.6 volts the battery is defective or discharged.

Perform a 3 minute test to see if the battery is Sulphated. A Sulphated will not accept a charge and the battery must be replaced.

Three Minute Test:

When battery voltage is too low for the temperature corrections perform the three minute test.

Charge the battery at 40 amps for 3 minutes.

After 3 minute the battery's open circuit voltage should not be higher than 15.5 volts.

If higher than 15.5 volts, replace the battery.

If 15.5 volts or lower.

Slowly re-charge the battery for 24 hours.



Batteries should be charge slowly as not to damage them.

Charging time and rate:

Times and rates are based on battery temperature of 80° F (The colder the battery the more time required).

12.4 V 30 min	
12.3 V	45 min
12.2 V	1 Hr.
12.1 V	1 Hr. 15 min
12.0 V	1 Hr. 30 Min
11.9 V	1 Hr. 45 Min
11.8 V	1 Hr. 55 Min

Load testing a battery has been the standard for many years. A better test is a conductance measurement. A conductance measurement is how easily current will flow.

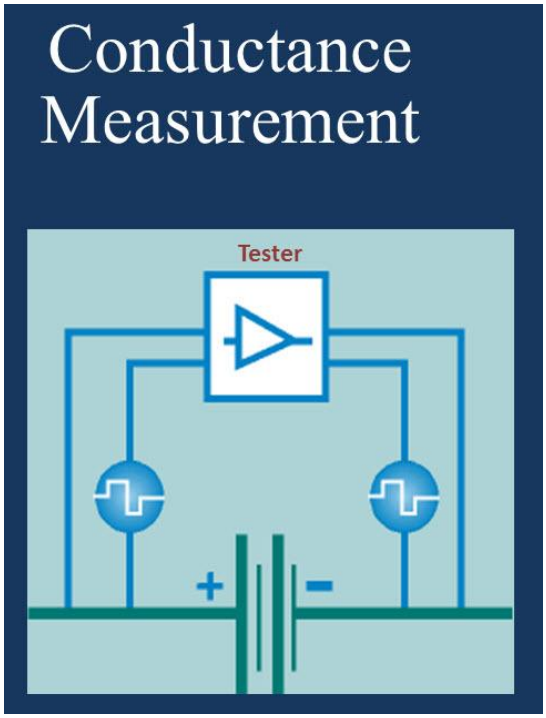

A low voltage A/C Signal is Impressed across the battery terminals (V_{AC}). The tester knows how much voltage is being used. The voltage from the tester enters the battery to be tested on the positive terminal. Passes through the plates and exits through the negative terminal of the battery. The A/C Current (I_{AC}) Response is measured. The tester measures the voltage returning. Conductance (G) is calculated using Ohm's Law: $G = I_{AC}/V_{AC.}$ The tester is designed to calculate the conductance. Some of these testers do not supply us with a value in Siemens (unit of measurement for conductance) but rather a pass or fail answer. The higher the concentration of ions present in the electrolyte, the lower resistance will be.

Battery Temperature:

Of all environmental factors, the temperature has the greatest effect on battery charge and discharge behavior. This has to do with the temperature-dependent electrochemical reactions occurring at the electrode/electrolyte interface, which may be considered the heart of the battery.

If the temperature decreases, the rate of electrode reactions decreases too. Assume the battery voltage remains constant, the discharging current drops and thus the power output of the battery. The opposite effect occurs if the temperature raises the power output of the battery increases.

Extreme cold or hot temperatures affect battery life when combined with the adverse effects of extended storage or connected to parasitic loads resulting in:

Reduced performance - High self-discharge rate - Irreversible damage

In regular operation conditions the cold temperature affects the battery greatly in the ability to provide power and the electrical power required to crank the engine.

The ideal operating temperature of a battery is 80 °F. At this temperature, a fully charged battery delivers a full cranking power and the starting system requires about the same amount of cranking power to start the engine.

A cold engine and battery is unable to deliver the power required.

This is due two factors:

The low temperature decreases the electrochemical ionic interaction in the battery.

The low temperature increases the oil viscosity in the engine, thus the greater energy to start the engine.

When a battery is completely discharged it may not accept a charge right away. The battery charger's ammeter may not indicate any charge at first. The chart may be used as a rule of thumb for a completely discharged battery to show it is accepting any charge at all.

Inductance:

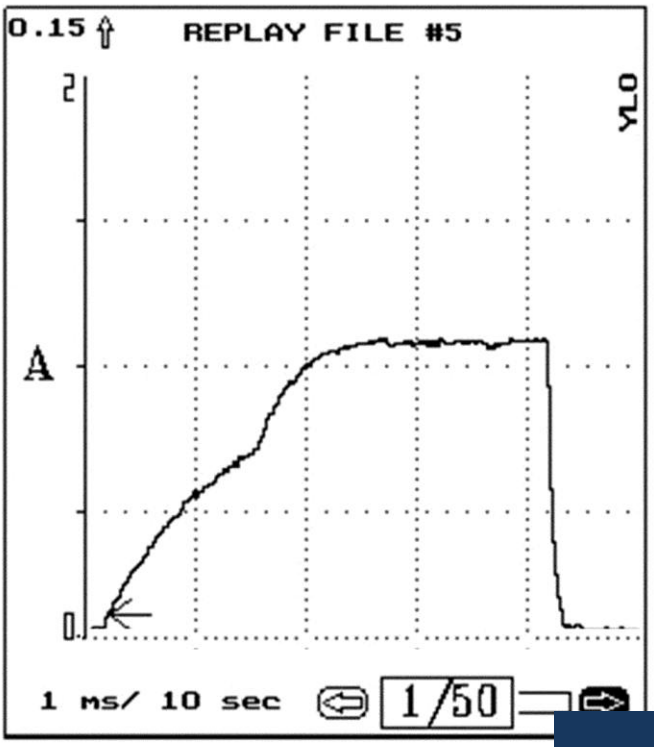

Why does the injector's waveform look like it does? When current starts to build, why is it so slow when electricity is so fast? Inductance is what makes the current move slow in a winding (injector). Inductance is the property of a coil of wire or other electrical device (solenoids) which oppose changes in the current that is in the windings. There is a certain behavior of a coil of wire, as it resists changes to the electric current through a coil. Engineers will design a specific number of turns in the winding to create a magnetic field that will do the work required. Said another way the engineer is designing an inductor. Each turn in the winding will contribute to the strength of the magnetic field.

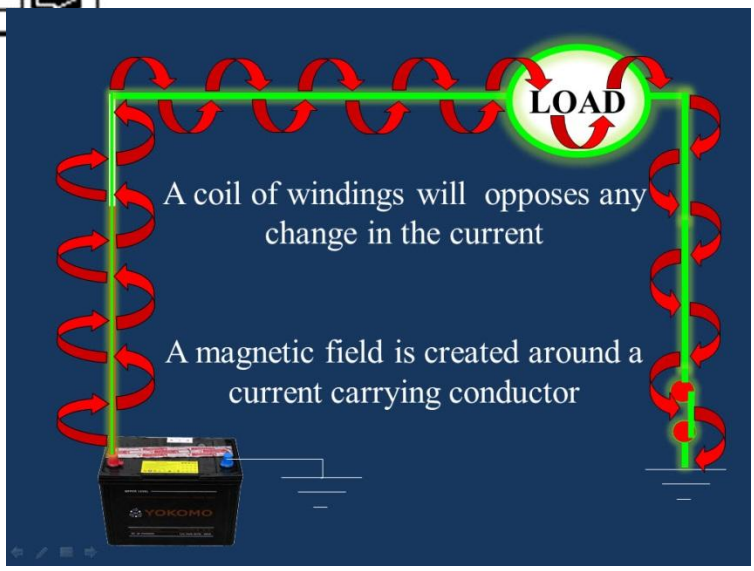

Inductance in the service bay:

Inductance can be seen when testing ignition coil, DIS or COP. Because of Inductance the primary windings act a certain way when current is running through them. As stated, the current builds up relatively slow. We can look at the current building and measure the time required to get to the normal maximum value. Measuring the time it takes is called raise time and we use the

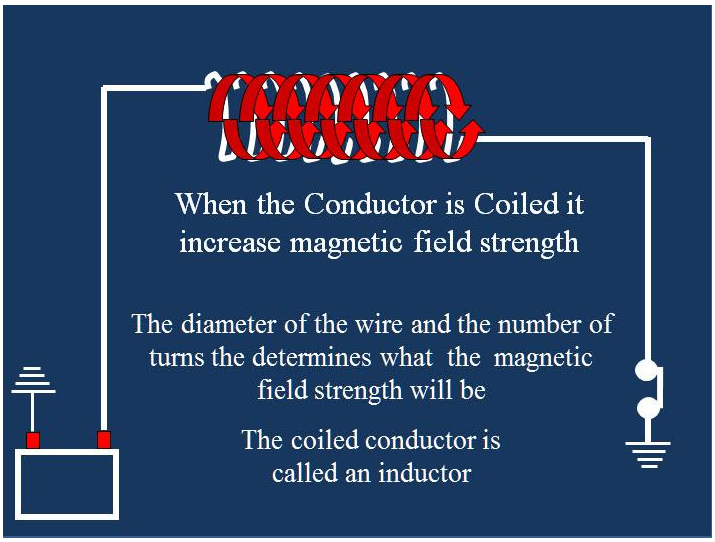

test to check for winding on the primary side that has changed resistance

A magnetic field is created around any current carrying conductor. By winding the wire around itself the magnetic field is strengthen. The diameter of the wire and the number of turns determines what the magnetic field strength will be. More winding equals a stronger magnet field. A coil of wire is an inductor. There is a counter voltage created when the magnetic field is created. This is called a counter EMF (voltage). Think back to, when a wire passes through a magnetic field a voltage is created in it. It doesn't matter if the magnetic field or the wire is moving, voltage will be induced into the wire. When a magnetic field is being created it is moving out ward to encompass the wire. Voltage is induced and it reacts with the electrons already in the wire. This all creates a counter voltage to oppose the current buildup which slows

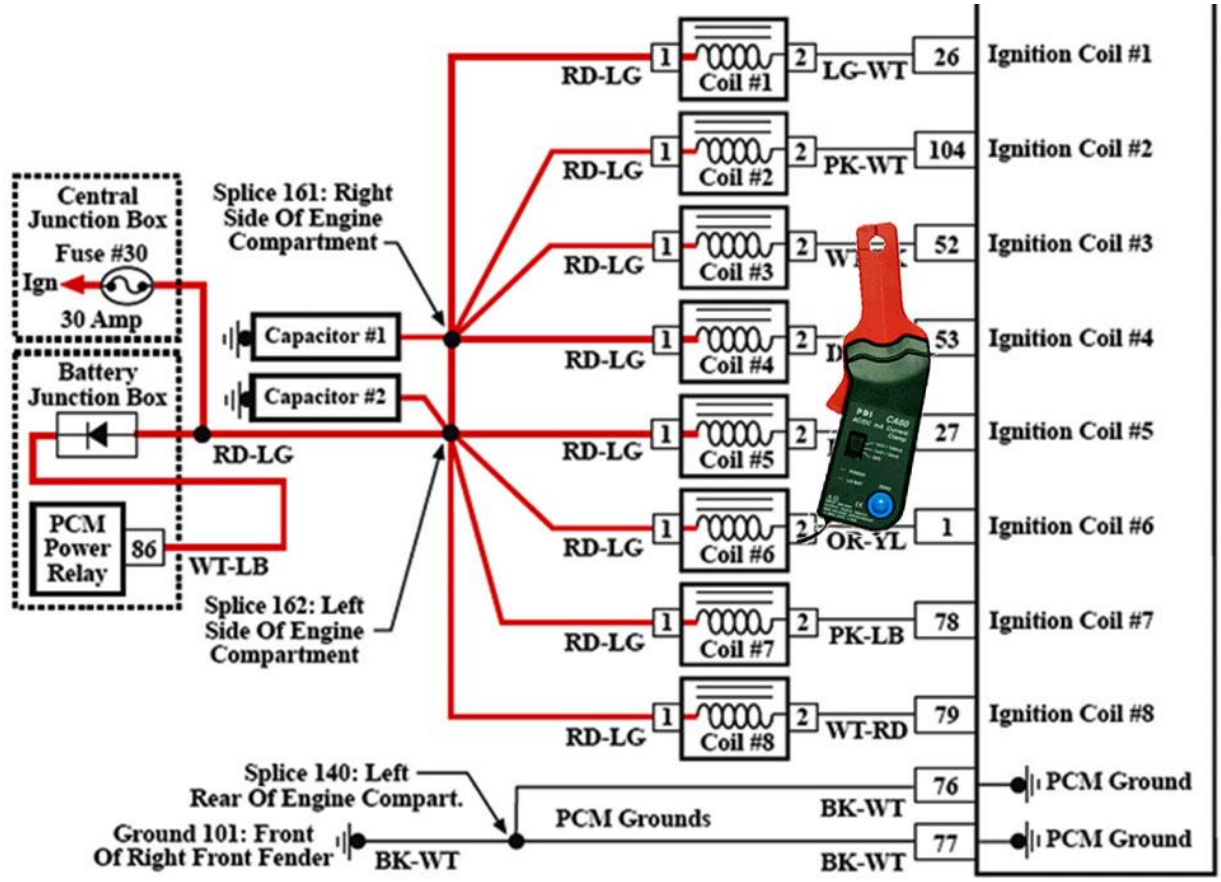

it down.

Each coil on plug unit has power supplied from a fuse in the junction box. The ground (control) circuits are individual circuits going to the PCM. The PCM supplies the ground to turn the primary circuit on to create a magnetic field. When the PCM turns off the circuit the magnetic field falls back into itself and produces an inductive kick into the secondary windings of the coil. That induced voltage is discharged through the spark plug inside the cylinder and ignites the air fuel mixture

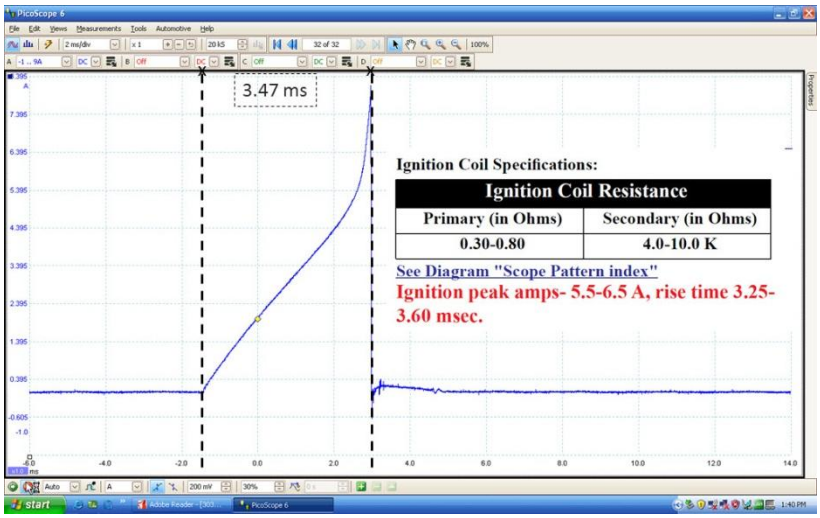

Connect the amp probe so that is only measures the current of 1 coil unit.

Use the cursors and measure raise time of the primary circuit. Start where the current first begins to build and place the other cursor at the peak of current. Compare the measured value to the vehicle specific time. A coil that has too short of a raise time is shorted. If raise time is too long, there is additional resistance in the primary circuit.

Capacitance:

Is the property of a circuit or device which enables it to store electrical energy by means of an electrostatic field? A device design to have a certain value of capacitance is called a capacitor. It has the ability to store electrons & release them at a later time. The number of electrons it can store for a given applied voltage is a measure of its capacitance.

Electrical testing:

When the technician walks up to a vehicle he doesn't have any idea of what the real problem is. Or at least he shouldn't. He may know the symptoms but that helps where to begin the diagnostics, it isn't the diagnostics. Some call that the red car syndrome. The last red car I had in my service bay with this symptom needed widget so that's what this one must need! We hope that you are beyond that thinking. It is fine to use your experience when diagnosing, but don't start your diagnostics with replacing parts because a different vehicle had a similar problem. When testing electrical or drivability problems, with or without codes why not perform some simple tests gives you a lot of information?

If we spoke in the simplest way to discuss electrical testing we could say; check the power(s) and the ground(s) before condemning any device. Powers – Grounds – Device: Yes the statement is naive. The automobile is a complex electrical maze of electrons moving everywhere. But let's start with the premise that it all comes down to light bulb technology. Power – Ground – Bulb (device). If we agree on that we could possible do some simple testing at the start of the diagnostics to find common problems quickly.

Take the time to learn how to use your VOM correctly. Practice on a few known good vehicles. Use both auto range and manual range to see which one works for you. We like manual ranging because the values appear on the screen in a consistence format. Auto range does exactly that it selects the format for you. When using auto range you must be alert to what has been selected. You don't want to be reading mv as V.

Battery Open Circuit Voltage:

Remove surface charge in order to get an accurate reading. If the battery was being charged or if the vehicles was being driven and the charging system was charging the battery there will be a surface charge. Turn the head lights on for a minute then wait 5 minutes for the battery's chemical activity to settle down.



Connect DVOM leads across the battery terminals.

Compare values to chart

12.66 Volts	100%
12.45 Volts	75%
12.25 Volts	50%
12.06 Volts	25%

If the battery's open circuit voltage is lower than 12.55 volts continual testing to answer these questions.

Has the vehicle been driven enough for the battery to charge?

Is a battery drain reducing voltage when the ignition is off?

Is there excessive starter draw?

Are the Battery terminals corroded?

Is there a charging system problem?

Is the battery defective?

Test the open circuit voltage of the battery. Don't forget to check the temperature. If the engine has been running or the battery was being charged, remove any surface charge before measuring the batteries voltage. Turn the head lights on for 15 seconds.

You can continue testing if the open circuit voltage is 12.55 volts or higher. If open circuit voltage doesn't indicate that the battery is 100% charged it must be charged slowly. This quick test tells you that the battery is good enough to continue testing. Remember the voltage reading because that is the correct specification for available voltage. Be aware that as you test the battery voltage will continue to drop.

If the SOS is less than 12.55 V, or is 75% or lower, determine;



Has the vehicle been driven enough for the battery to charge?

Is a battery drain reducing voltage when the ignition is off?

Is there excessive starter draw?

Are the Battery terminals corroded?

Is there a charging system problem?

Is the battery defective?

Measure Specific Gravity:

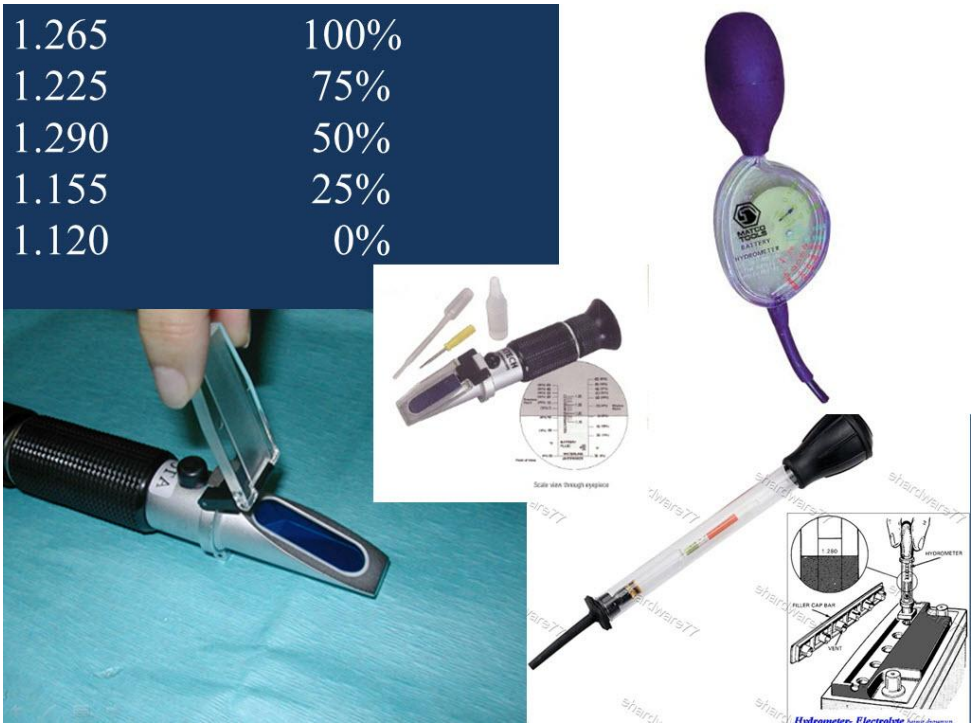

If the batteries open circuit voltage is below 12.55 voltages check for weak cells by measuring specific gravity of each of the cells. Don't forcible remove the vent caps and destroy them. If they battery is a sealed type simply omit this test. The advantage of measuring specific gravity over open circuit voltage is you can find weak cells.

Remember that temperature affects the readings. Add .004 points for every 10° F above 80° F and subtract the .004 points for every 10° F below 80° F.

Don't pry the caps off just to do this test.

Use the chart to determine the state of charge.

1.265	100%
1.225	75%
1.290	50%
1.155	25%
1.120	0%

All cells should be close to the same specific gravity. If cells are greater than 20 points apart, recharge the battery and retest.

If the battery is good, continue testing.

Staying with powers, ensure that the charging system is normal.

Not asking you to do a lot of work here, Start the engine and look at the voltmeter.

Fig 76

Check the grounds:

Grounds are as important as powers. Any technician will tell you stories about a bad ground causing a difficult problem. A quick test of the batteries, engines, and body's ground will get them out of the way for further testing.

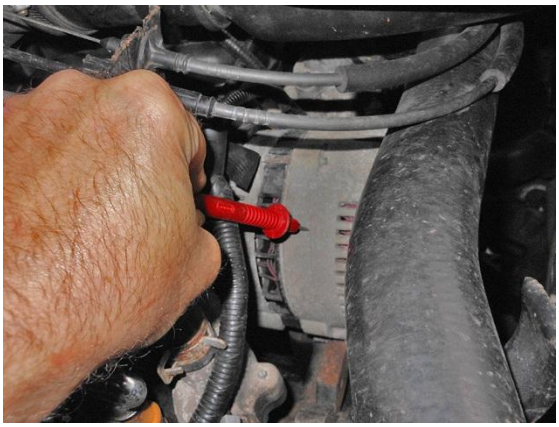

The ground circuits run from the components and modules to the body and engine so they must have a good path to the battery's negative terminal. Any engine accessary such as an alternator must also have a good ground path.

Crank the engine while observing the voltage drop. During engine cranking voltage shouldn't exceed 0.85 volts.

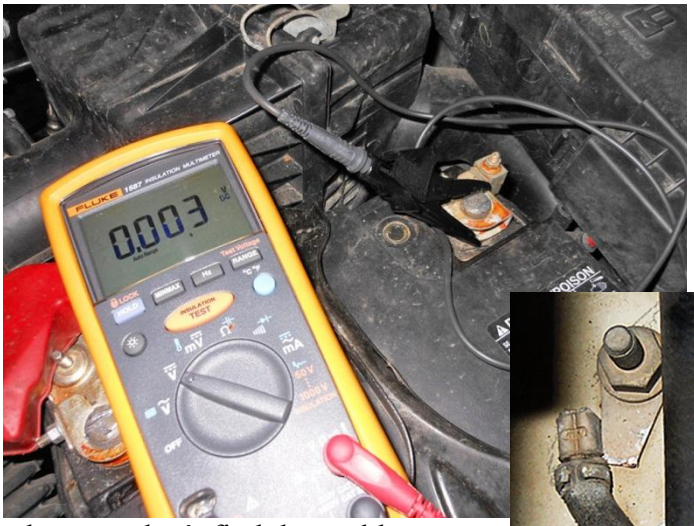

Taking a few minutes to check powers and grounds will save time and headaches latter. Most of us won't do the preemptive testing for whatever reason. That's ok; just remember them and how important they are so you can do them when you don't find the problem.

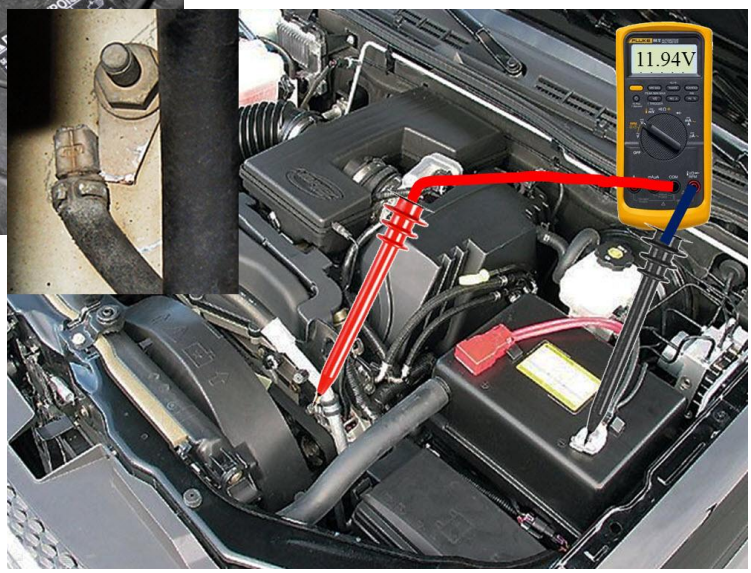

More Electrical Terminology:

DC Voltage:

Dc voltage is electric current which flows in one direction only through a circuit. Visualize water flowing towards one direction inside a pipe. Almost exclusively, DC is used in any low voltage, mobile and electronics applications.

AC Voltage:

Alternating current is the flow of electrons which constantly changes direction. AC Voltage is alternating current takes turns alternating at being positive and negative. How quickly it changes direction is defined by frequency (measured in Hz).

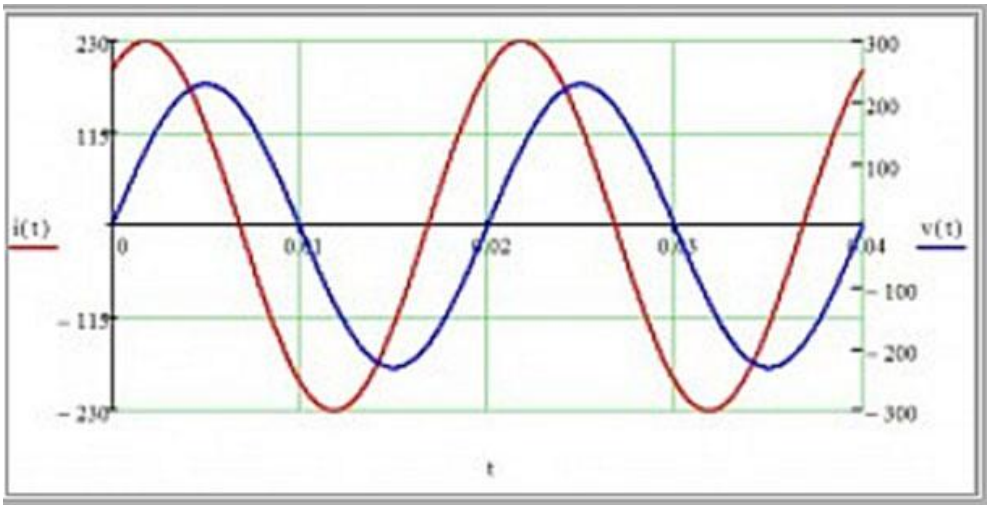

Random AC Current/Voltage (230V) waveform

As an example the residential power grids is usually 50/60 Hz, which means that the voltage and current will change direction 50/60 times per second.

It starts from zero, grows to a maximum, decreases to zero, reverses, reaches a maximum in the opposite direction, returns again to zero, and repeats the cycle indefinitely.

Frequency (Hz):

The number of times the signal changes states in one second. A good example of measuring frequency would be the signal from a crankshaft or camshaft sensor.

The examples are a GM 3800:

Camshaft position sensor signal at idle is 7-8 Hz and at 55 mph 14-16 Hz.

Crankshaft position sensor signal at idle is 190-230 Hz and at 55 mph 380-460 Hz.

Ford 4.6:

Crankshaft position sensor signal at idle is 440-490 HZ and at 55 mph 870-900 Hz.

Camshaft position sensor signal at idle is 6-7 HZ and at 55 mph 12-14 Hz.

Chrysler 2.4:

Camshaft position sensor signal at idle is 20-40 HZ and at 55 mph 32-45 Hz.

Crankshaft position sensor signal at idle is 8-174 HZ and at 55 mph 260-358 Hz.

These sensors can also be tested with a DSO. The two signals can be compared to each other to

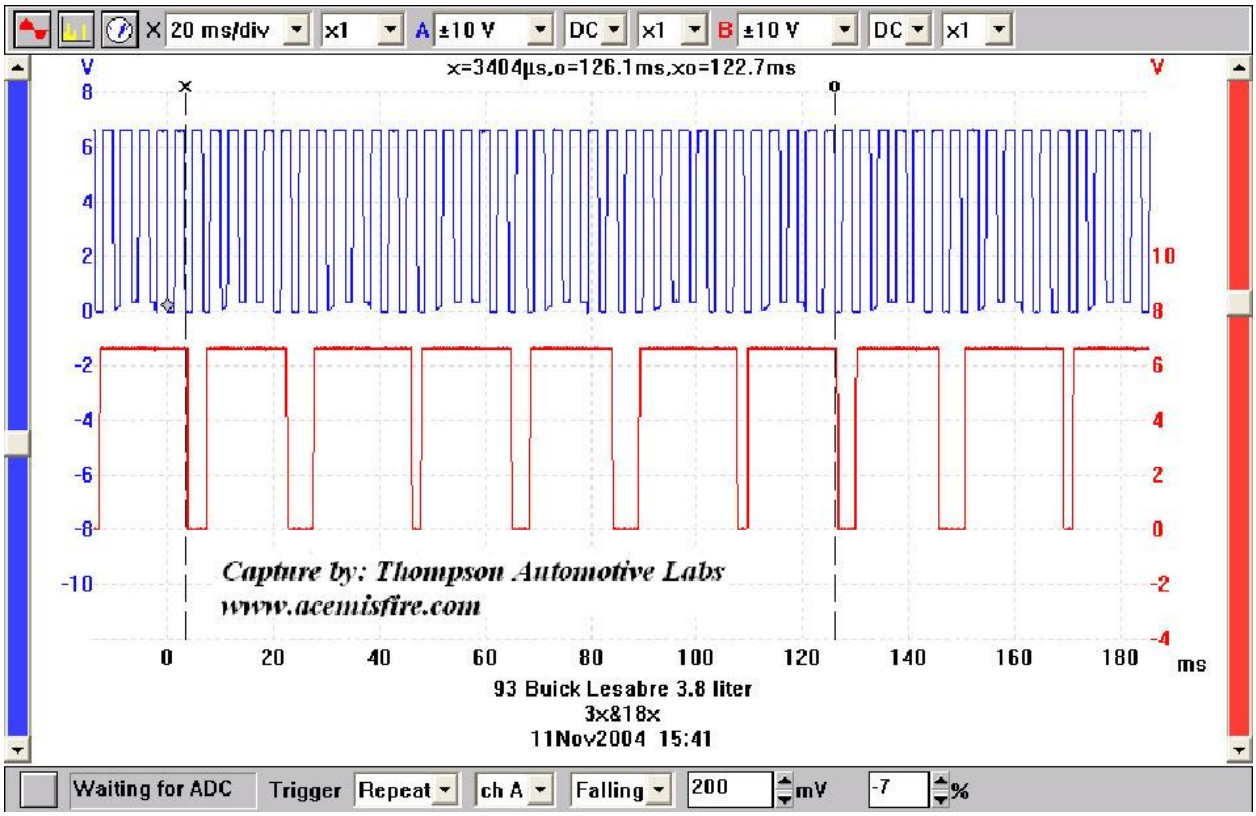

check for Cam Crank alignment.

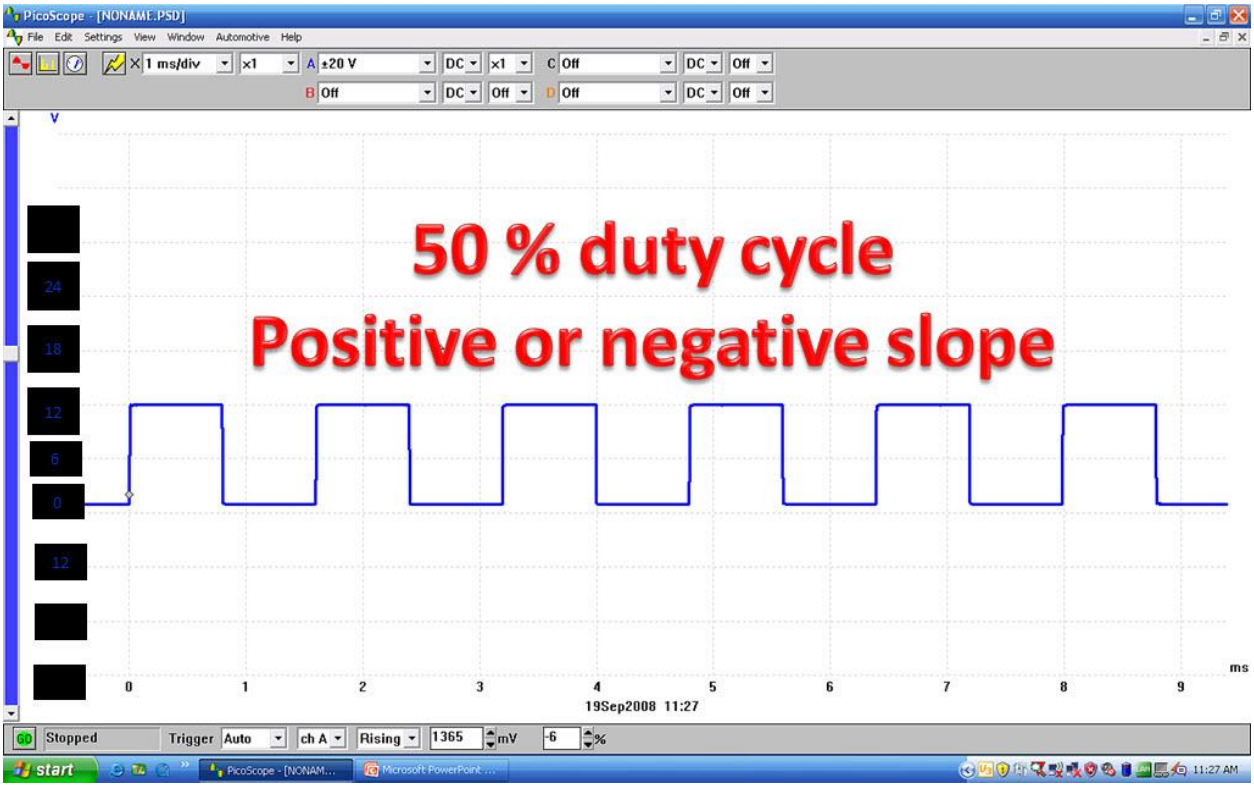

Duty Cycle:

Duty cycle is the time in percent that the signal is high or low.

It can have a positive slope, high. Measuring the time the signal is high.

It can have a positive negative slope, low. Measuring the time the signal is low.

The variable valve timing control solenoid can be used to demonstrate duty cycle.

Diode:

Diodes allow electricity to flow in only one direction. The arrow of the circuit symbol shows the direction in which the current can flow.

Forward Voltage Drop:

Electricity uses up a little energy pushing its way through the diode.

There is a small voltage across a conducting diode, it is called the forward voltage drop and is

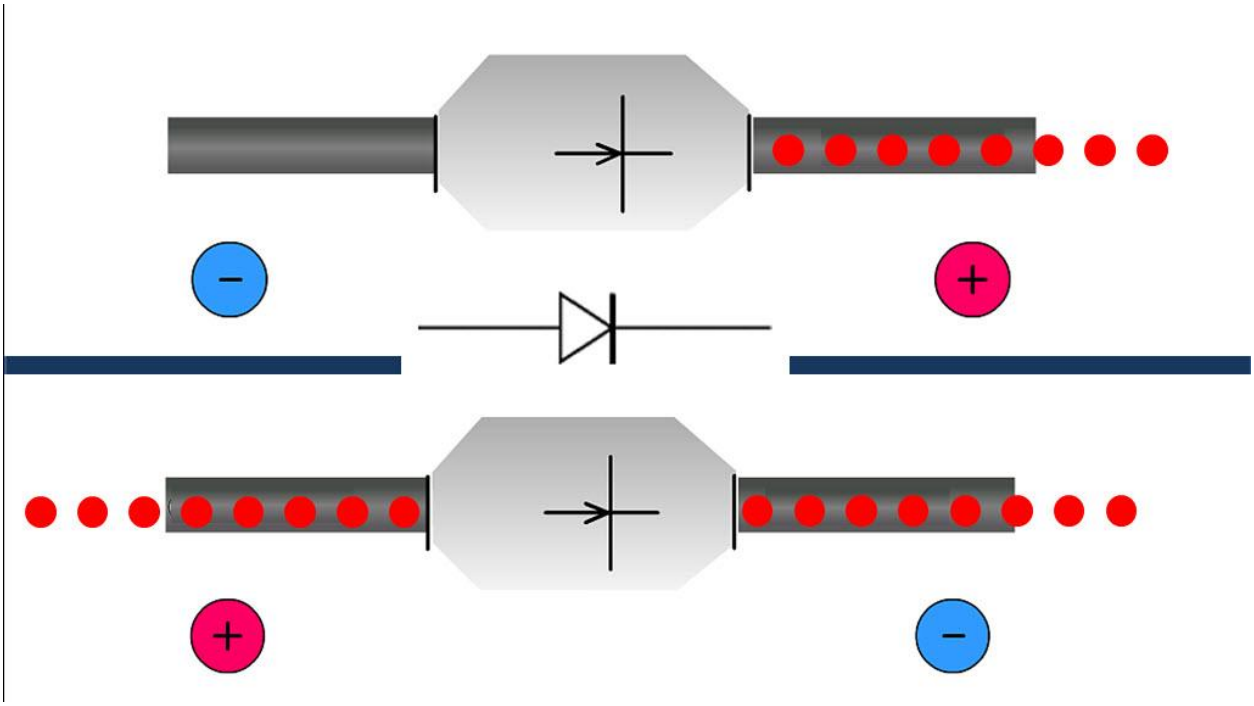

about 0.7 V for all normal diodes.

Reverse Voltage:

When a reverse voltage is applied a perfect diode does not conduct.

Electrical units of measurement:

Prefix	Symbol	Basic unit	Example
Mega	M	1 000 000	80MΩ
Kilo	K	1000	20kv
Milli	m	.001	50mv
Micro	μ	.000001	25μa
Nano	η	.000 000 001	20ηv
Pico	ρ	.000 000 000 001	15ρf

Prefix Symbol
Basic unit
Example

Mega	M	1 000 000	80 MΩ
Kilo	K	1000	20 ηv
Milli	m	.001	50 mv
Micro	µ	.000001	25 µa
Nano	η	.000 000 001	20 ηv
Pico	ρ	.000 000 000 001	15 ρf

Digital Storage Scope (DSO) Fundamentals:

The DSO allows the technician to view voltage/current over time. You may have heard this definition before. But have you considered what it means? With a DVOM measurement the displayed value is one moment in time. You don't know where the signal (voltage, amps) came from (higher or lower). That one moment in time thing works well for a signal that isn't changing amplitudes. The DSO does that as well as supplying information on what the signal has been doing in the past. The DSO doesn't do Ohms, so it isn't going to replace the DVOM. It is an additional piece of test equipment. On today's modern vehicles there are signal where the DSO is REQUIRED not an option.

The DSO is required for:

- Communications
- Cam and Crank signals
- Fuel system
- Ignition system

Can be used almost anywhere a DVOM is used.

DSO Controls:

There are three basic controls.

- Range / Gain set the voltage scale:
- Time base / Sweep rate:
- Trigger:

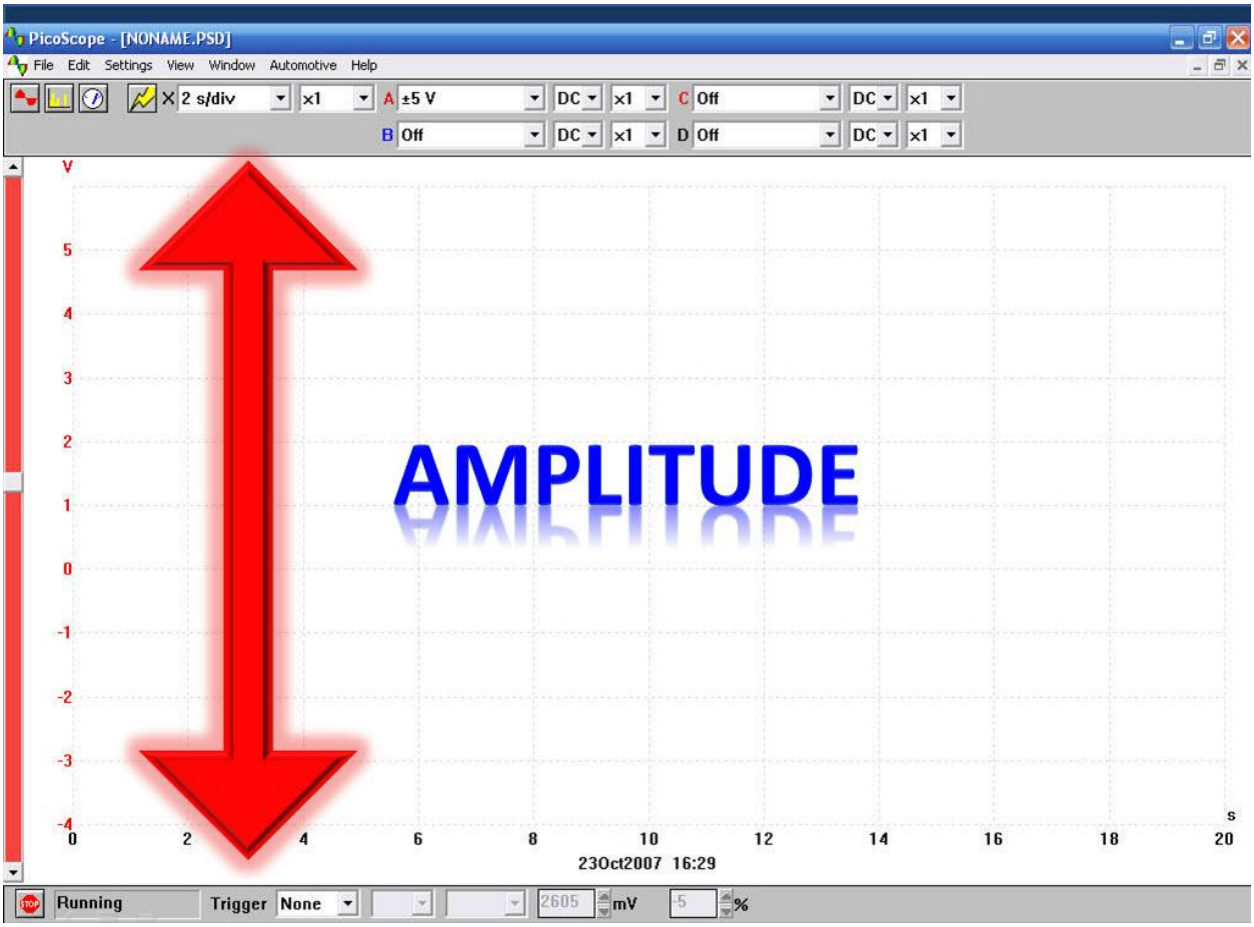

Voltage range or amplitude

The screen is common to all scopes. The vertical of the screen displays amplitude of a signal. If voltage/amps increase the pattern on the screen goes up. If they decrease the pattern goes down. It is adjusted to 5 volts. That means you can measure up to a 5 volt signal. But in the real world you wouldn't want to test a 5 volt signal on a 5 volt scale, because if the signal voltage was 5.3 volts, it go above the top of the screen, and you wouldn't be able to see it. There would be a pattern at the top of the scale but it is there because it's the top of the scale and the screen cannot show any more amplitude. And the user would think the signal is 5 volts exactly and not know it was 5.3 exactly.

Dual voltage range for dual patterns, notice the color codes;

This is an example of a Chrysler Cam and Crank position sensor. There are two channels, one for each sensor. Notice that the blue and red scales are set at 5.0 volts. These are Hall Effect sensors. Chrysler has a wide specification for the supply voltage to each sensor, 8.5 to 9.5 volts. If any internal fault occurred causing voltage to leak inside the signal may indicate that by going over 5 volts. However, we wouldn't see it here with nothing over 5 volts being able to be displayed. Use a scale that is higher than the expected amplitude.

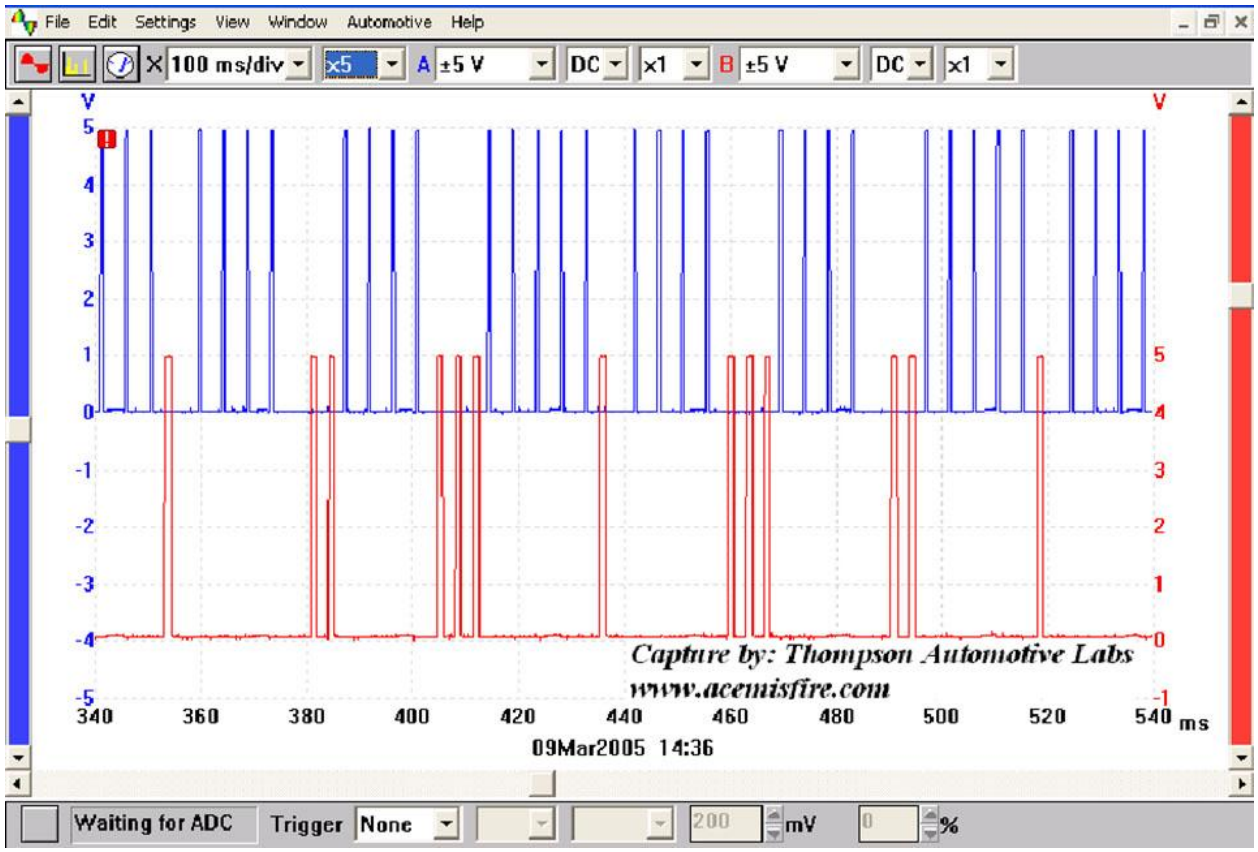

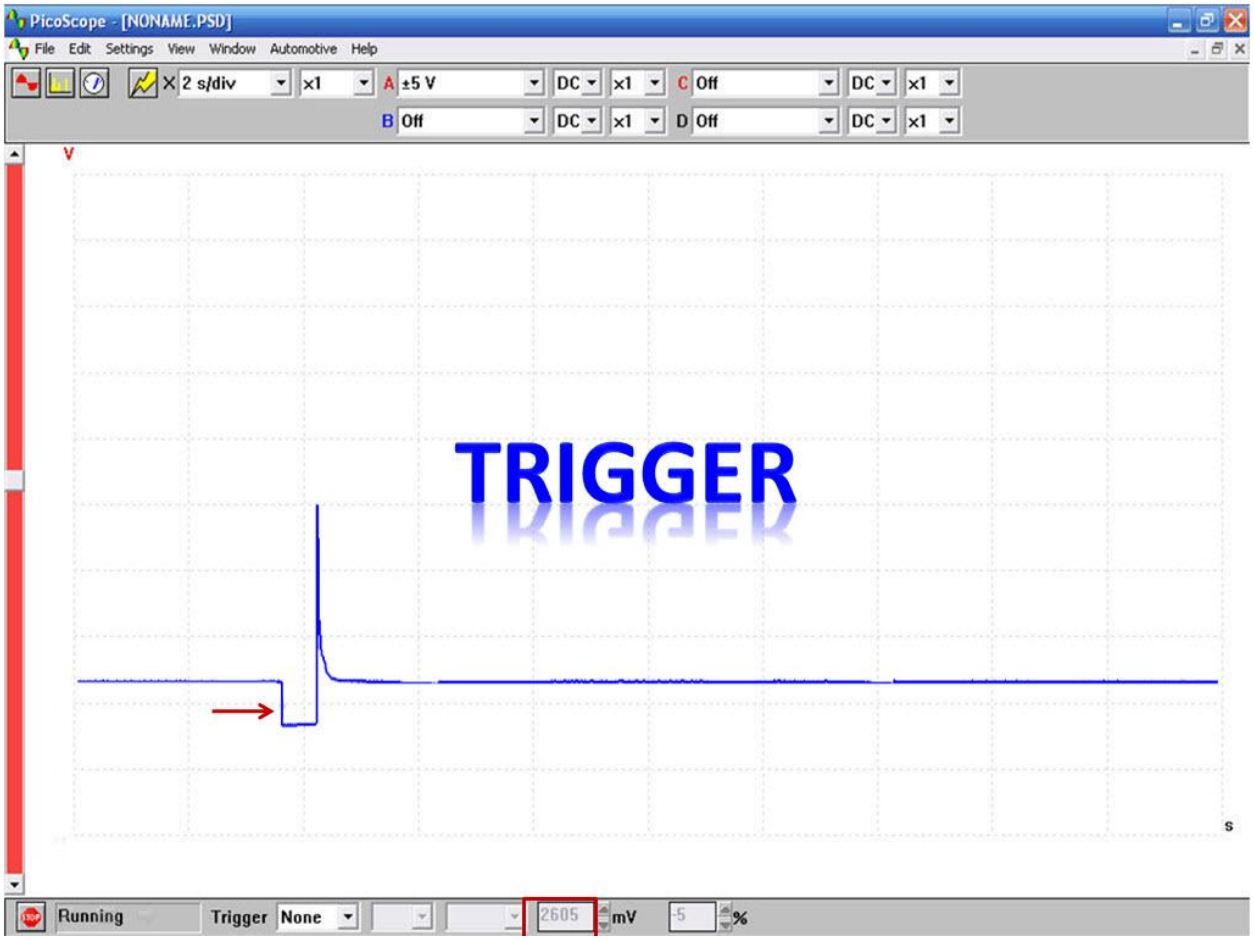

Trigger set to start when voltage drops below a preset point as indicated by the red arrow.

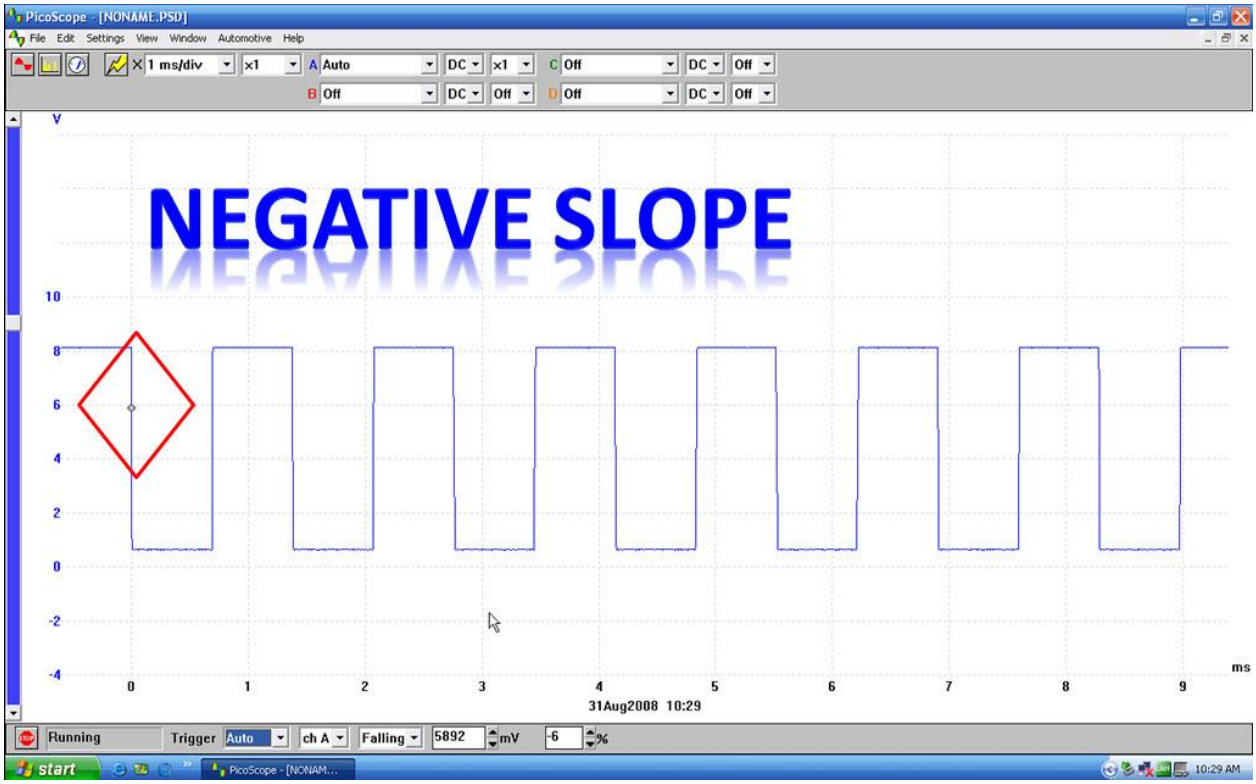

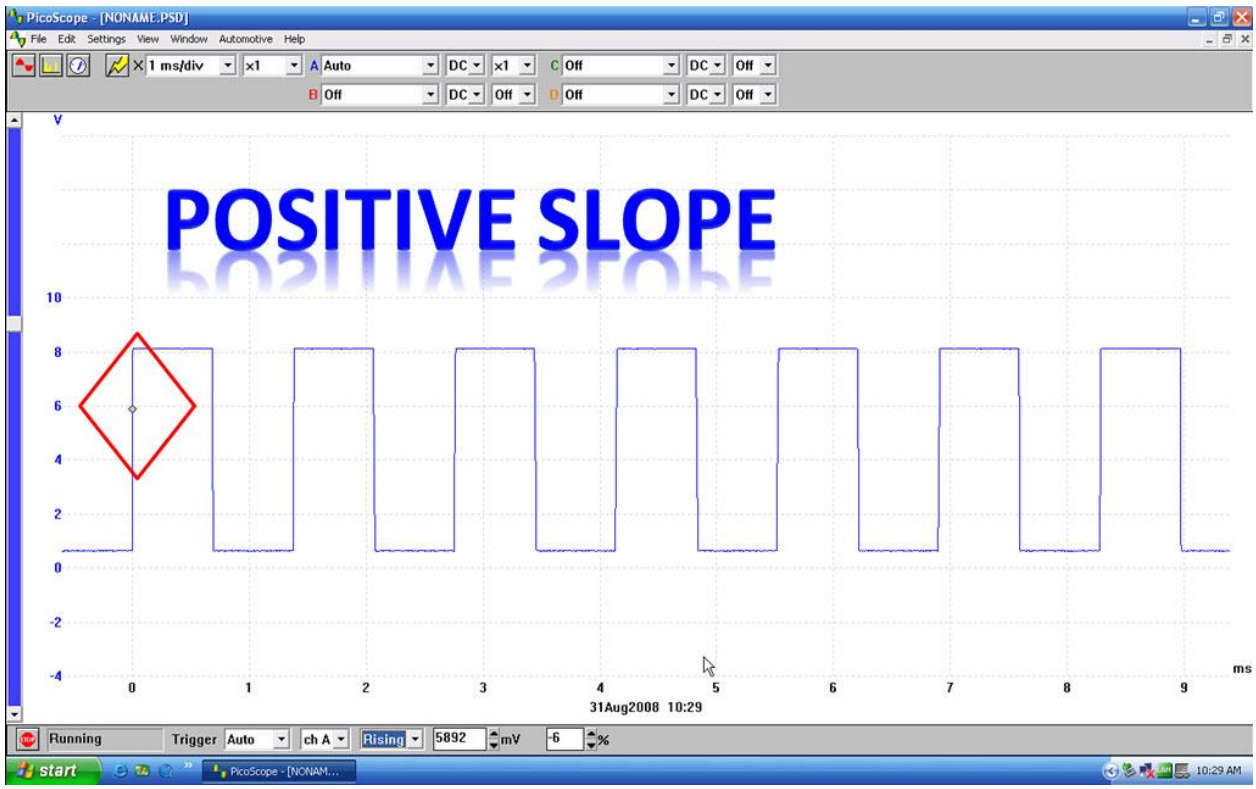

Same signal as the pattern above but positive trigger was selected.

Trigger setting:

The trigger is a voltage level that the signal must cross for the scope to begin writing the waveform. The trigger can be set on a positive slope or a negative slope. Most automotive signals are repeating signals. In many cases they relate to engine speed. That repetitive rate almost never is synchronized to the sweep rate of the DSO. The waveform appears to float across the screen or bounce back and forth.

Some signals don't respond to trigger setting as expected.

This is a General Motor's Class II communication signal. It changes states between 0.0 volts and 7.5 volts. It also changes the frequency in the time the signal is high. This is called a variable pulse width signal. A voltage meter would attempt to average the signal and the result would not represent the actual signal being sent.

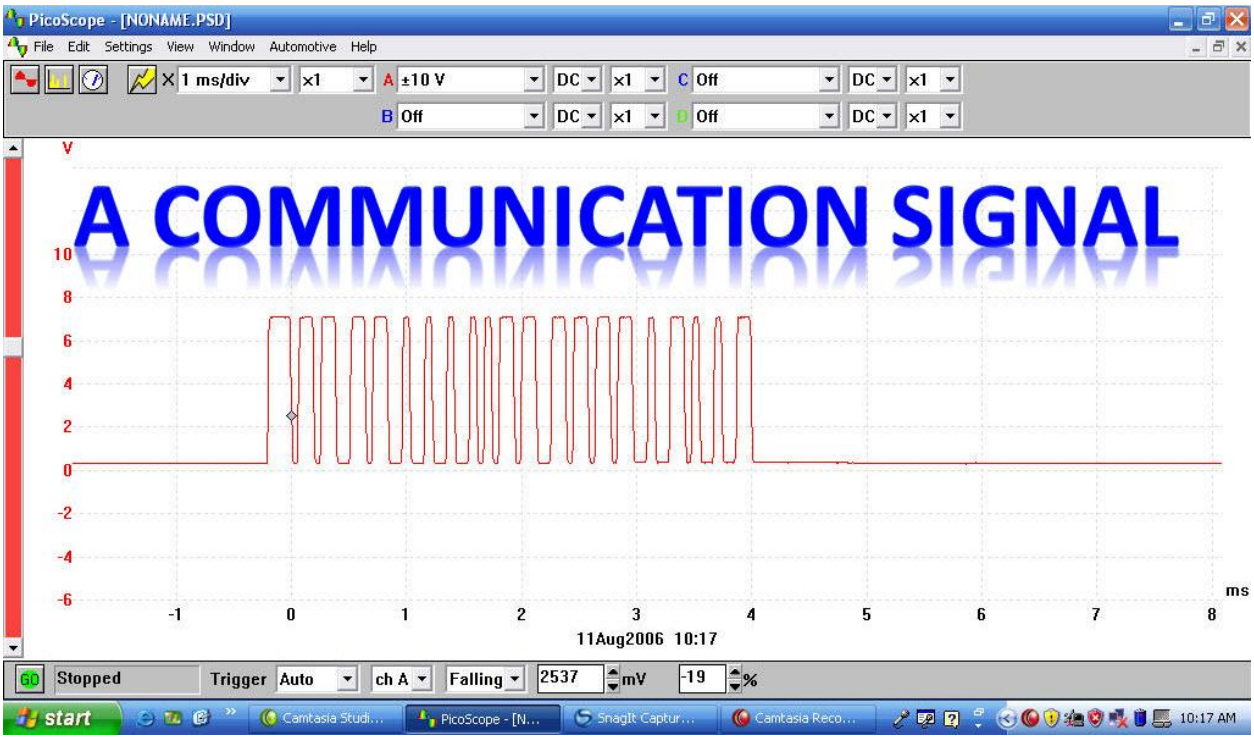

These are accelerator pedal position sensors. Two channels were used to compare the signals to each other. The pedal was slowly pushed downward the voltages increased on the sensors. After the pedal reach the floor it was released slowly and the voltages decreased. Any glitches would

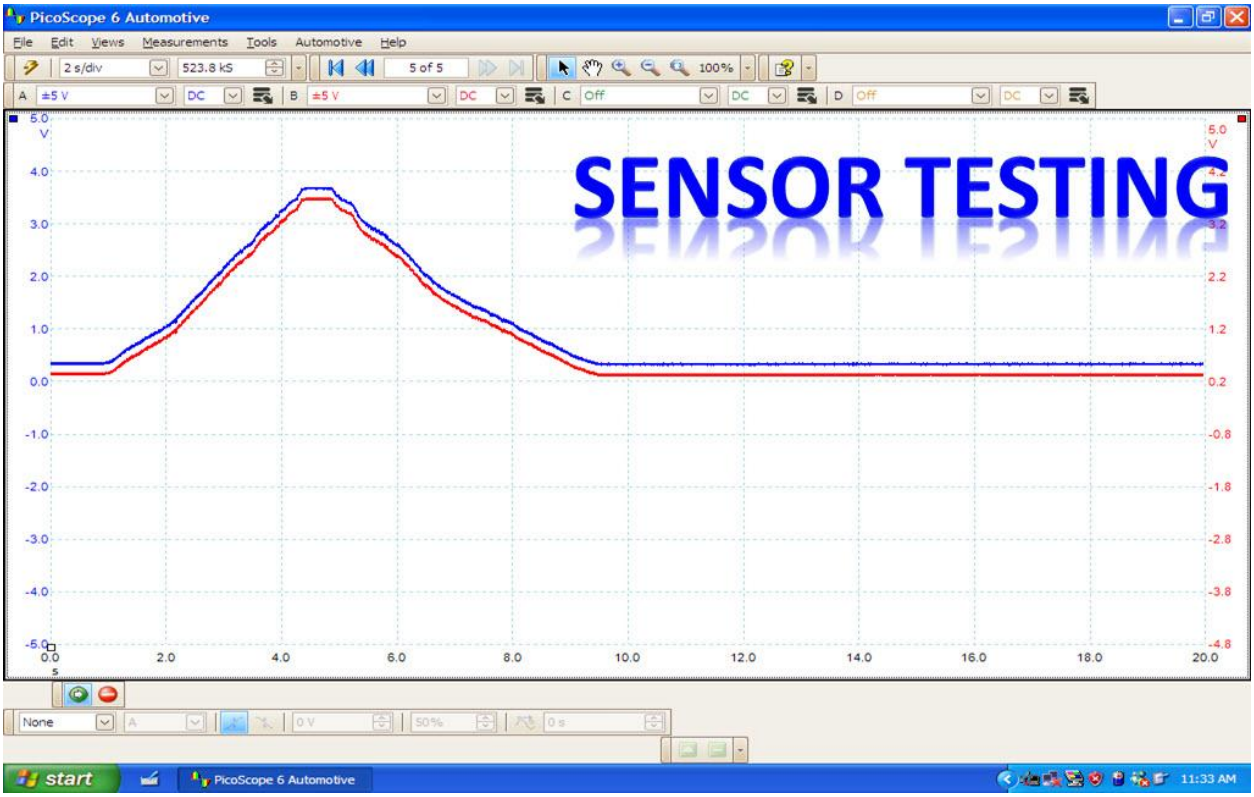

be seen in the waveform. Some APPs reverse the voltage and decrease as the pedal is depressed.

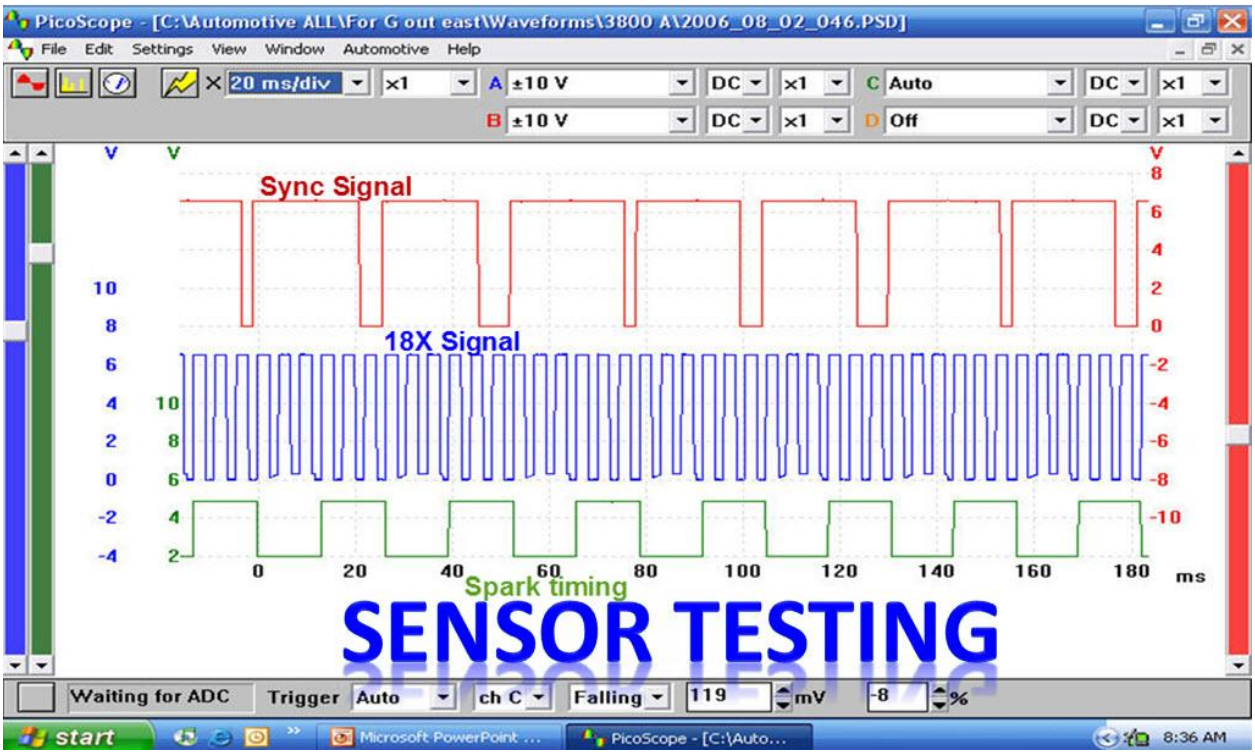

CRANK AND CAM SIGNALS

Cam and Crankshaft position sensors, electronic spark timing, and even ignition coil primary voltage are fast moving and changing states constantly. The DSO can capture these signals and display them for diagnoses.

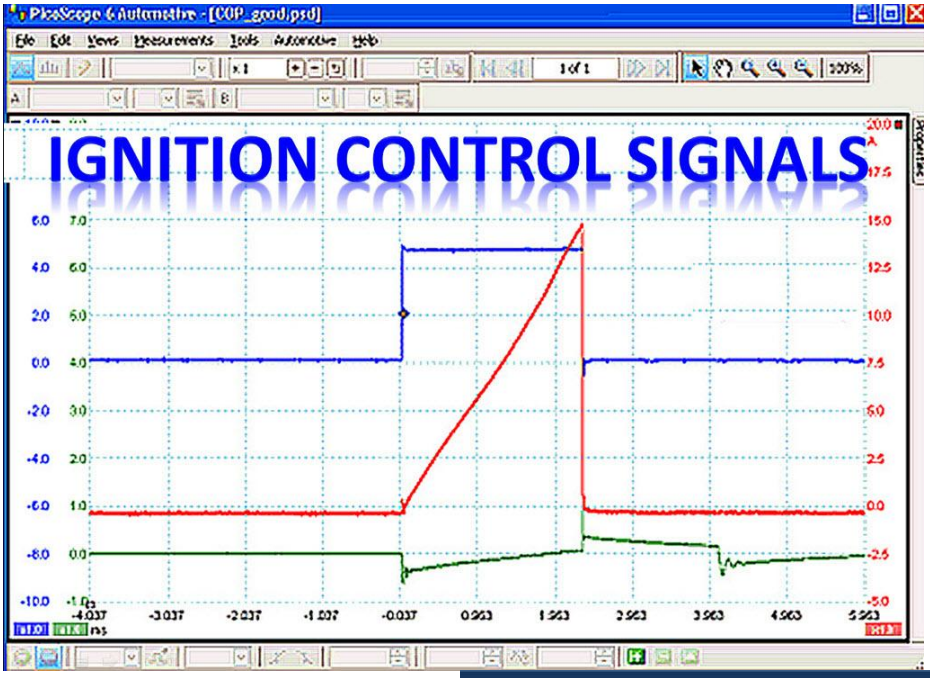

Ignition Control Signals Measuring Parasitic Draw:

Wait long enough for the computer to power down. The wait may be as long as 45 minutes. Then remove fuses one at a time to see when the excessive parasitic draw drops. Don't replace the fuses until you find the circuit with the draw. Replacing a fuse may cause one or more computers to power up and you would have to wait for them to power down again. Once you find the fuse use a schematic to identify the circuit. If you remove all of the fuses and don't find the draw use a schematic to find fusible links and mega-fuses and use the same technique to find the circuit.

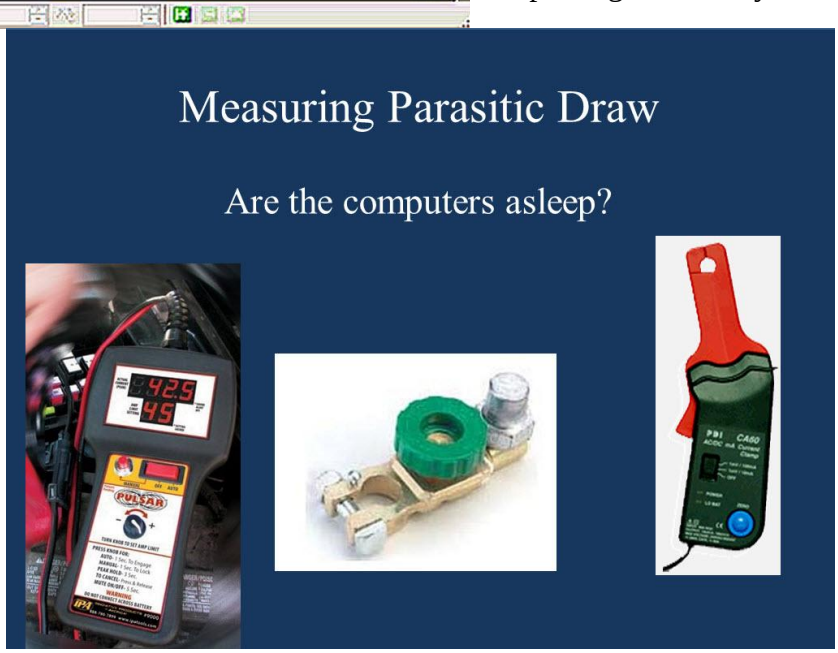

Component testing:



Thermistor, Temperature sensors:

Two wire sensor that changes resistance with temperature.

Examples:

ECT

ACT

TOT

IAT

Sensor Tests, open circuit

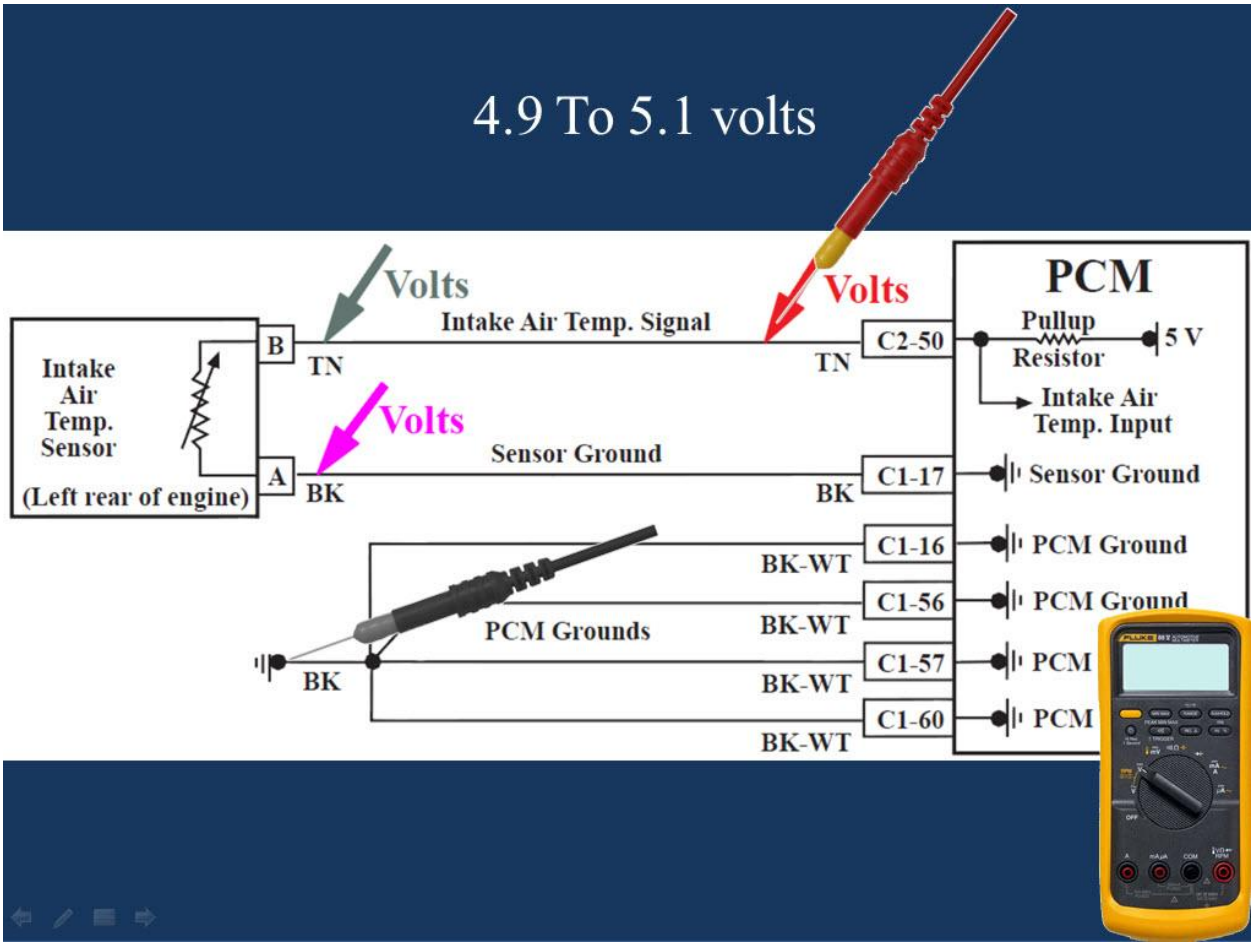

Voltage Vs. temperature

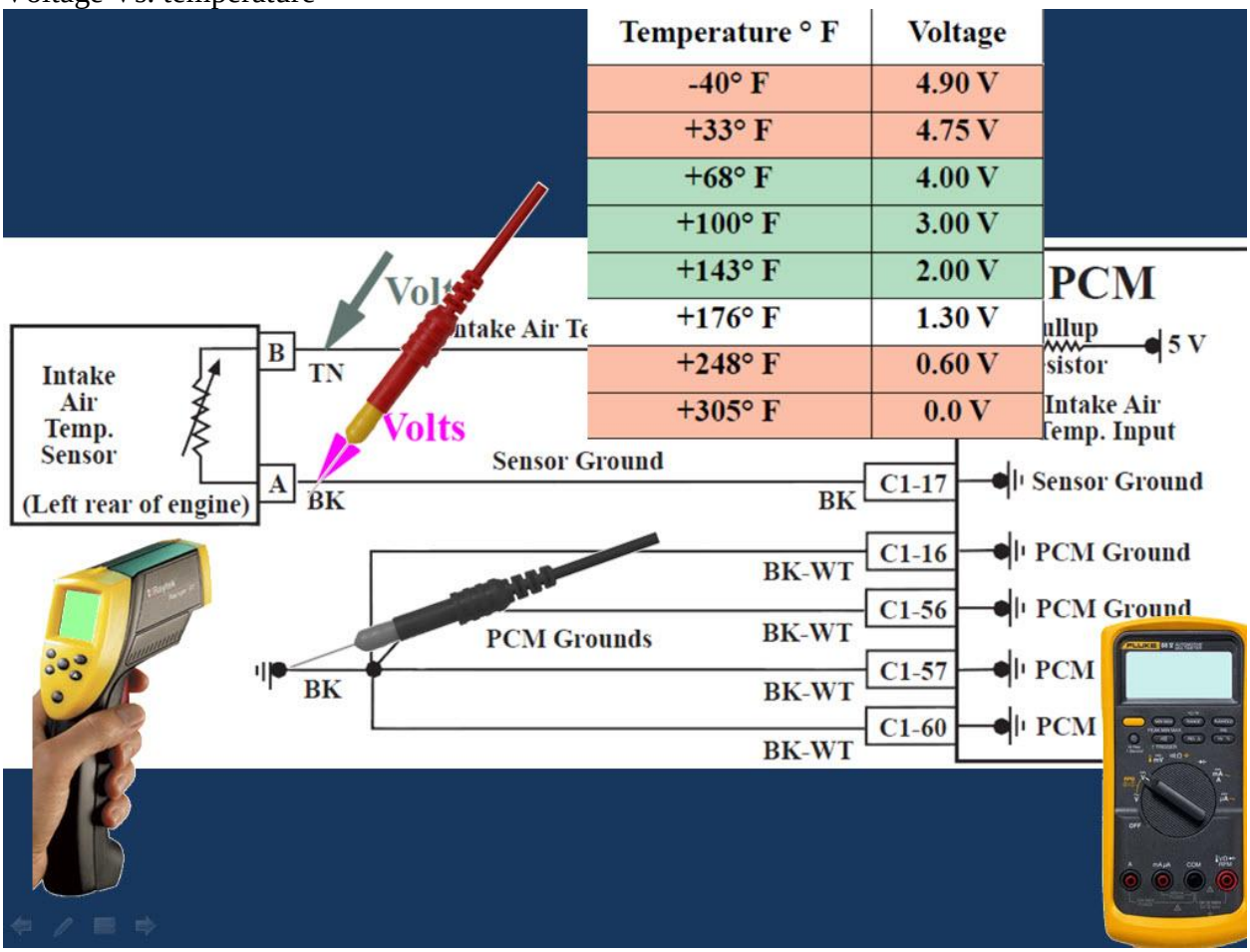

Voltage specifications

Temperature ° F	Resistance	Voltage
+32°	Below Self Test Limit	Below Self Test Limit
+50°	58.8 KΩ	3.50 V
+85°	24.0 KΩ	3.05 V
+100°	16.5 KΩ	2.15 V
+120°	11.0 KΩ	2.20 V
+140°	7.70 KΩ	1.35 V
+160°	5.25 KΩ	0.95 V
+175°	3.85 KΩ	0.78 V
+195°	2.80 KΩ	0.60 V
+212°	2.07 KΩ	0.45 V

The voltage signal from the sensor should correspond to the temperature. Use a Ray-tech or other temperature measuring device to compare actual temperature to what is displayed in scan data. If there is a difference, tests the sensors, power, ground, and device.

Voltage reference should be between 4.9 and 5.1 volts open circuit. Ground should be less than 0.050 volts.

Voltage will change as temperature changes.



If a DSO is used to measure the signal from the sensor it should be linear. As the sensor gets hotter the voltage should decrease. It isn't necessary to use the DSO to test a temperature the scan tool or DVOM works just find. If there are any diagnostic trouble codes related to the sensor and the fault is intermittent the DSO can be used to catch glitches.

This is a dual range temperature sensor circuit.

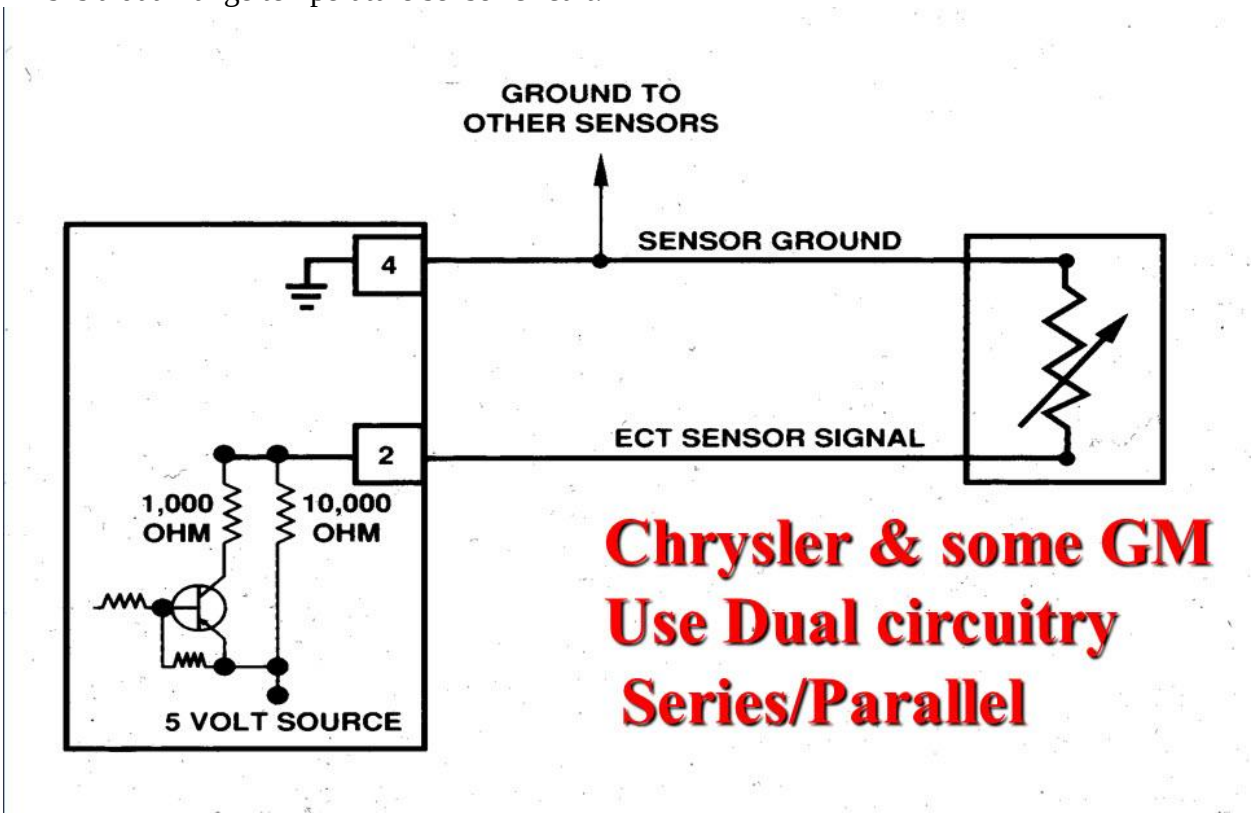

This is the dual Range temperature voltage signal.

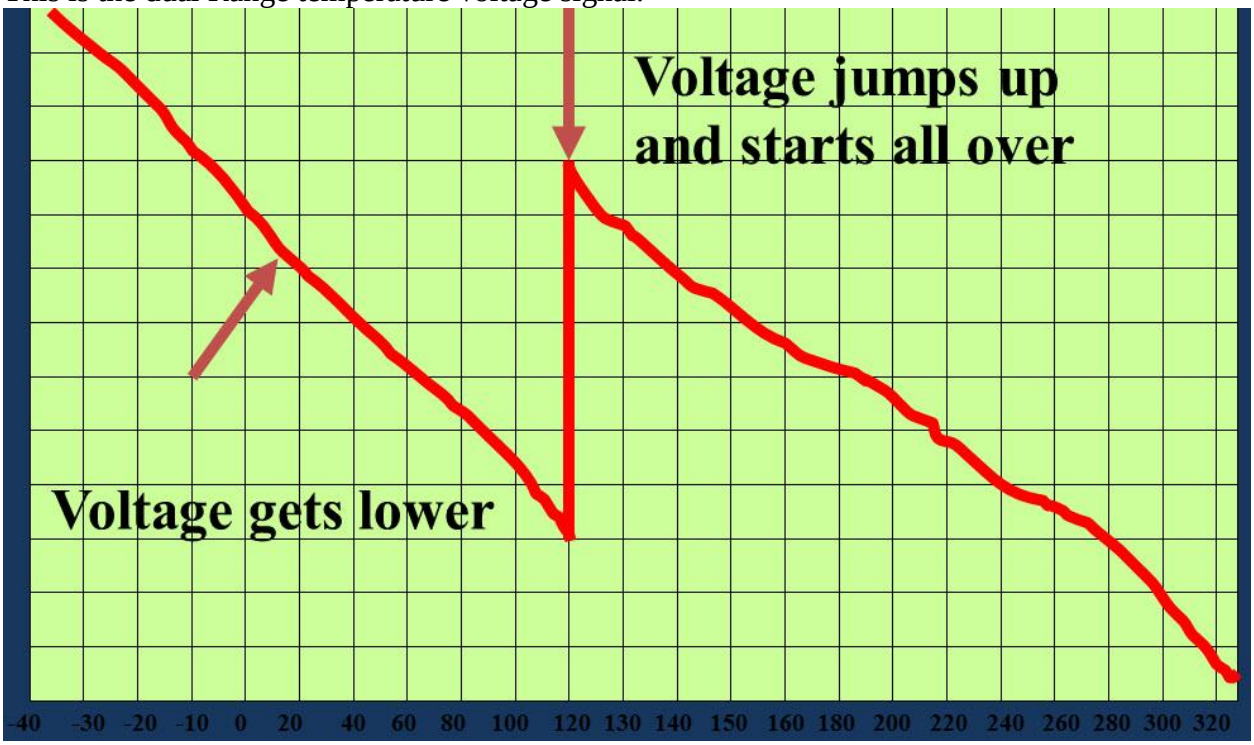

Chryslers and GM both use dual range circuitry for some of their temperature sensors. Those are best tested with a DSO to observe the switch between the circuits. The temperature sensors work like a single range sensor from high voltage (cold) to a pre-set temperature at which point the voltage returns to a higher voltage and continues to measure the temperature.

Magnetic fields around a coil.

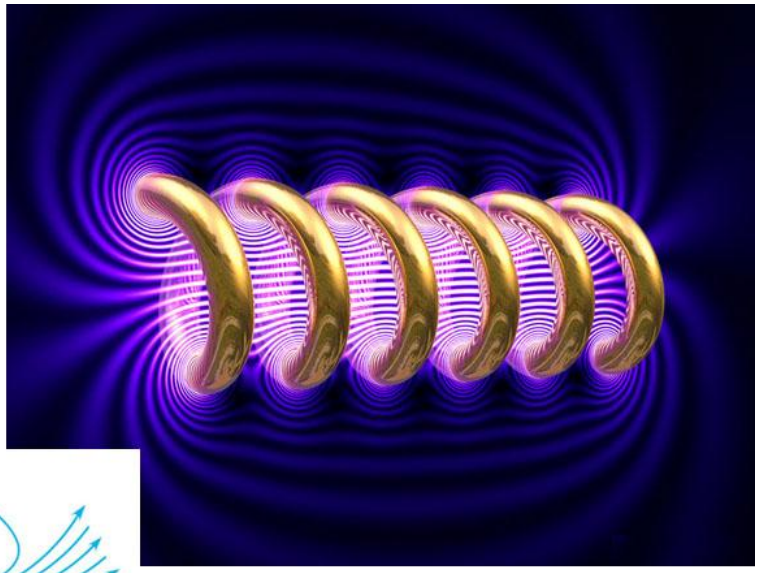

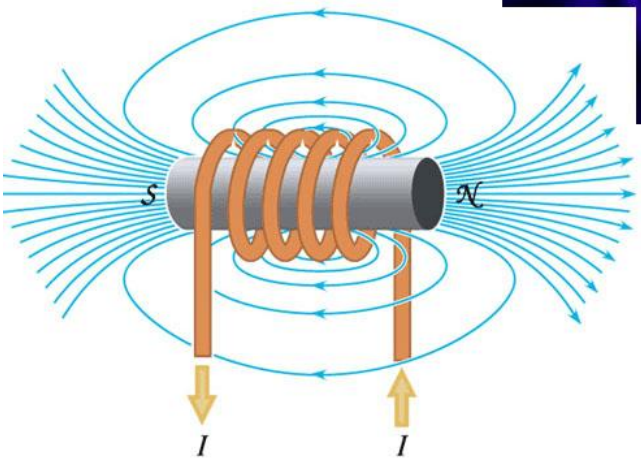

Solenoids:

Testing any solenoid can be easily done with a DVOM. Solenoids are electromagnetic devices that change electrical energy into mechanical energy. A conductor is wound around an iron core and current runs through it. This creates a magnetic field which moves a pintle to perform mechanical work. When testing any solenoid think of it this way. "A solenoid is a long piece of wire wrapped around a nail and the nail never goes bad." There is power on one side and ground on the other.

On vehicles either the power or ground side can be controlled by a computer driver. Most solenoids are ground side controlled. But as an example the Variable valve timing solenoid on a GM engine is power side controlled. That is where a schematic would save time. Without one a technician may start testing for power and not knowing it is controlled by the PCM think the solenoid doesn't have power and go chasing after it only to find out it is computer controlled. We

know we preach vehicle specific schematics but we want you to be efficient. You have to see how time can be wasted by not using one.

Solenoids as electrical loads:

Fuel injectors

Trunk release solenoids

Starter solenoids

Idle air control solenoids (some are stepper motors)

Canister purge solenoids

Door locks

B+ voltage test setup.

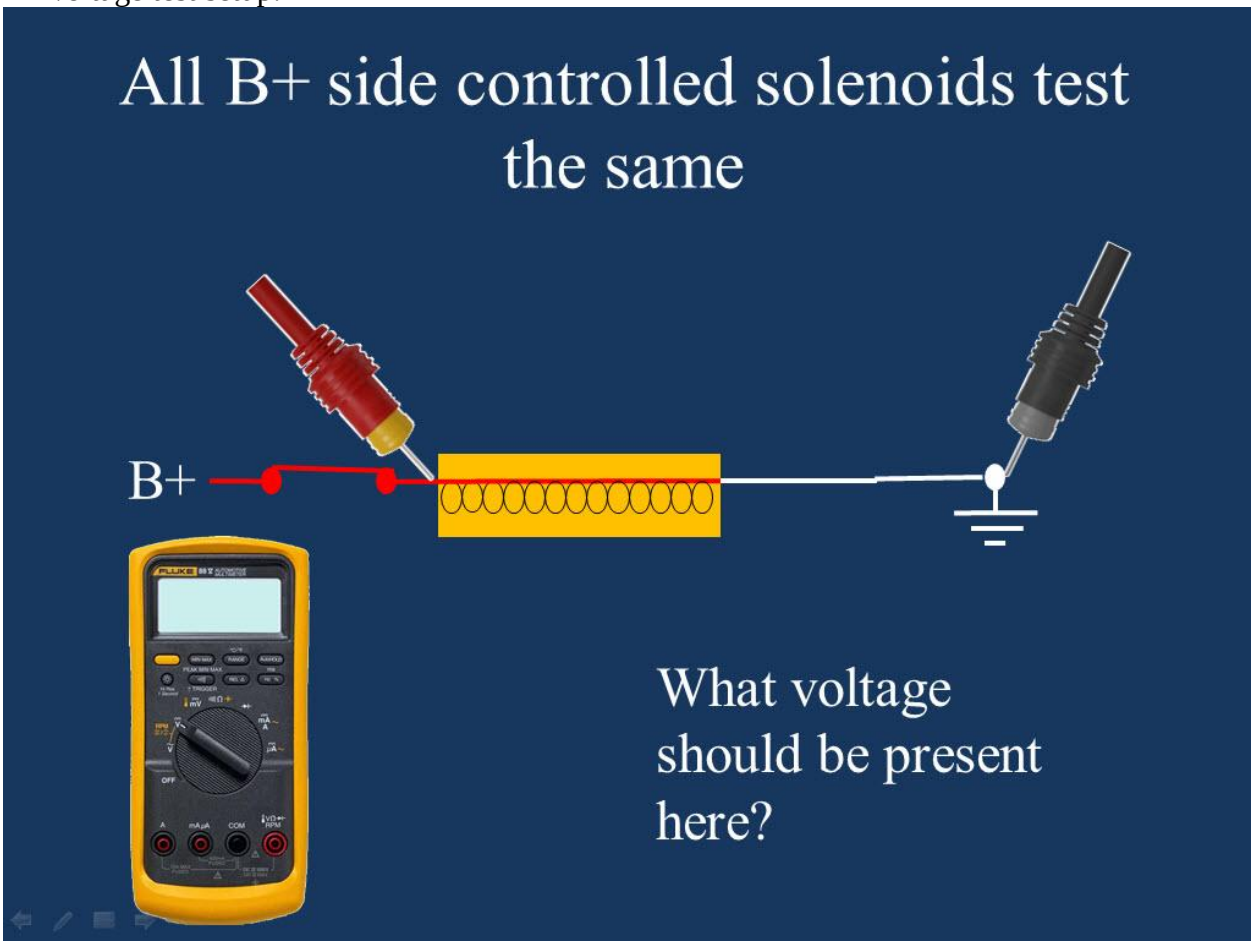

B+ must be supplied to the high side of a high side driven solenoid for it to energize the coil.

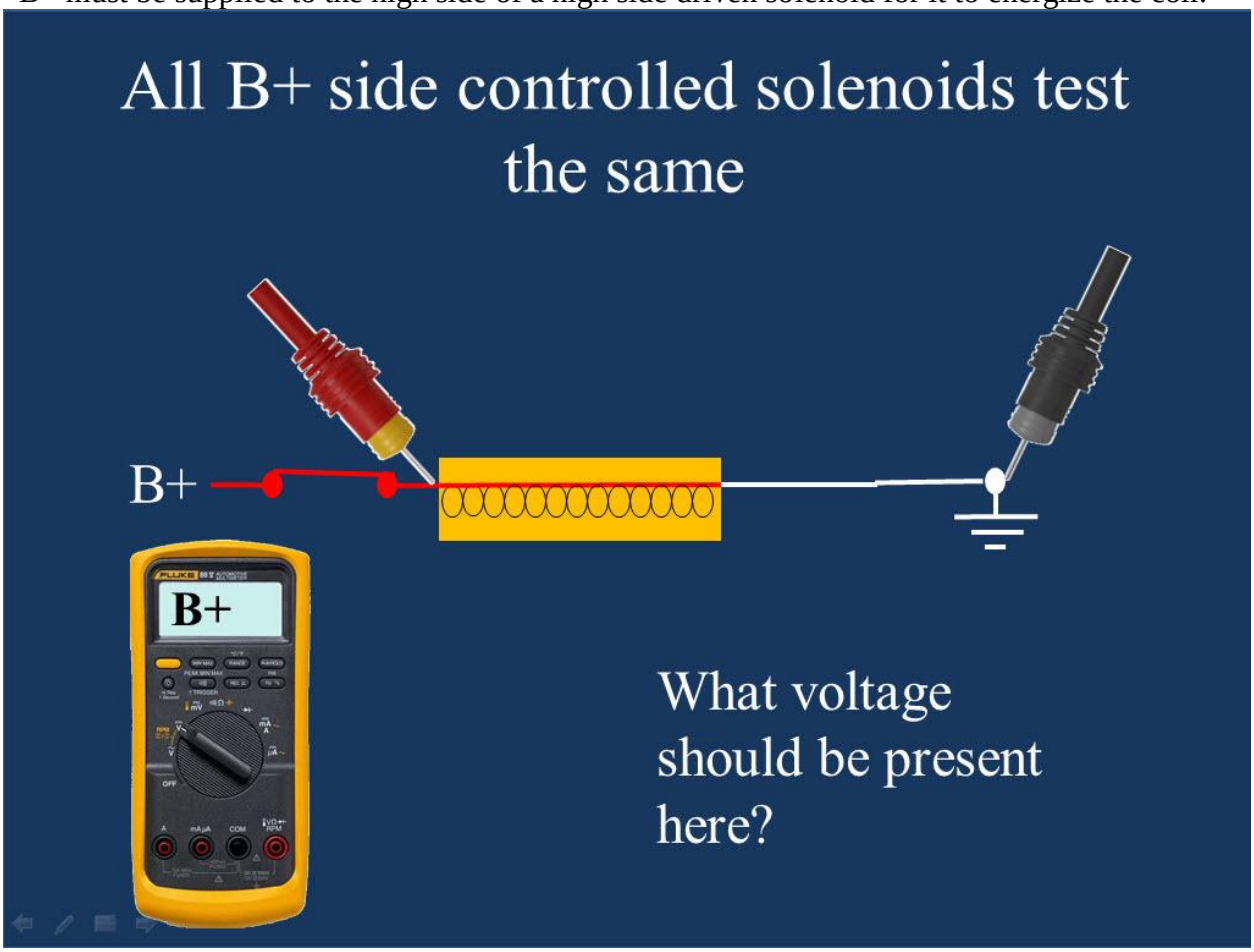

Ground circuit voltage test setup.

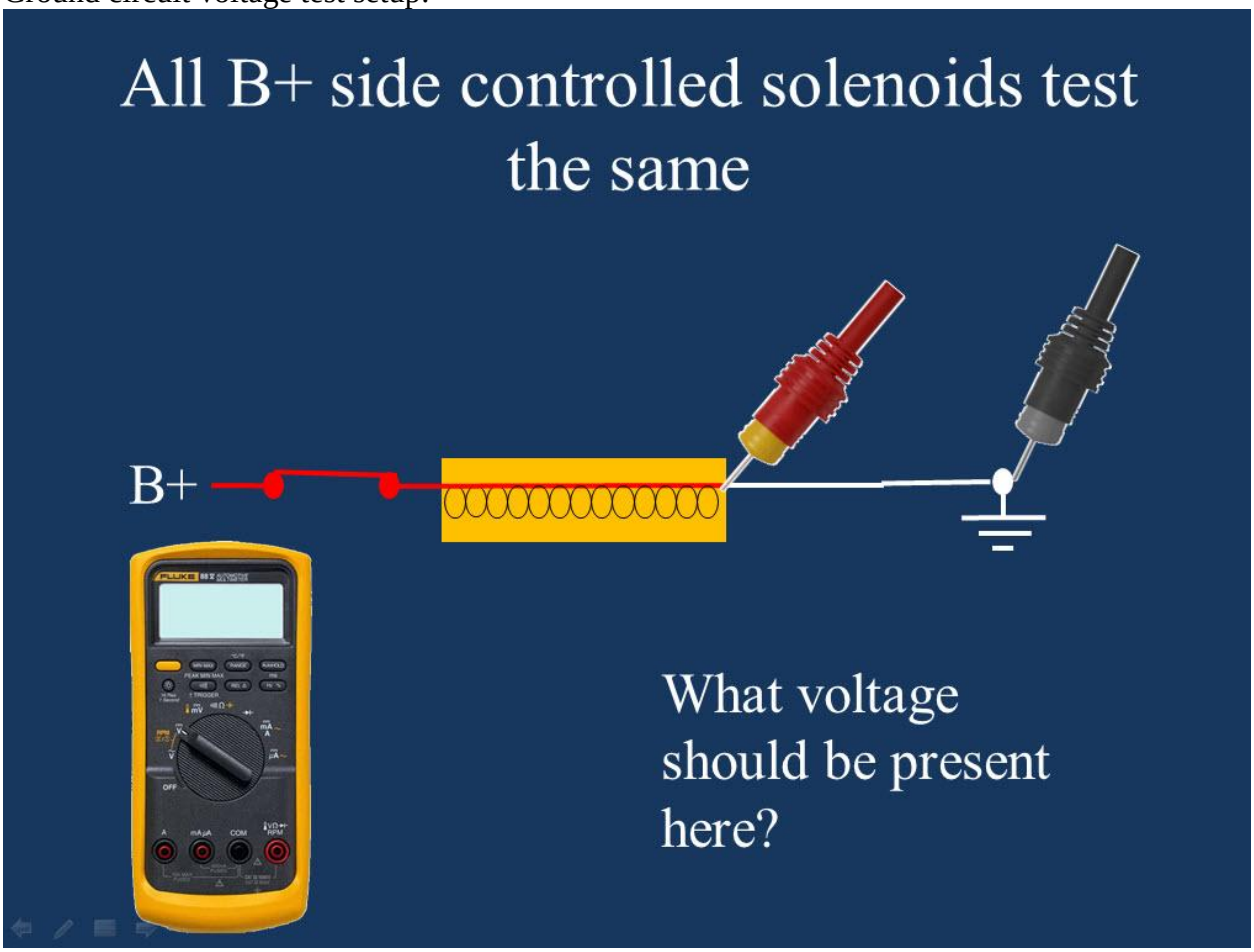

Ground side voltage must be under 0.7 volts.

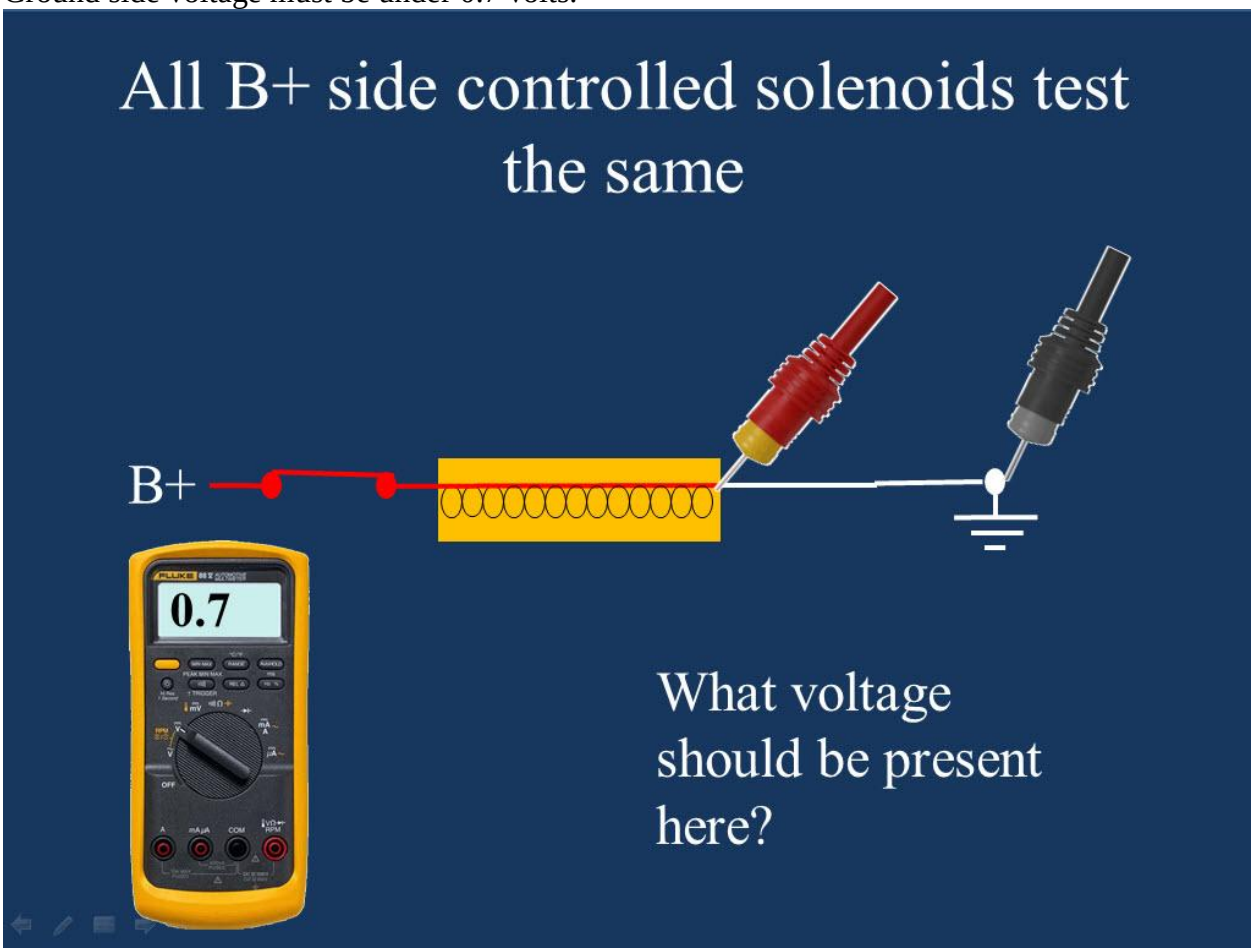

B+ testing for ground energized solenoids.

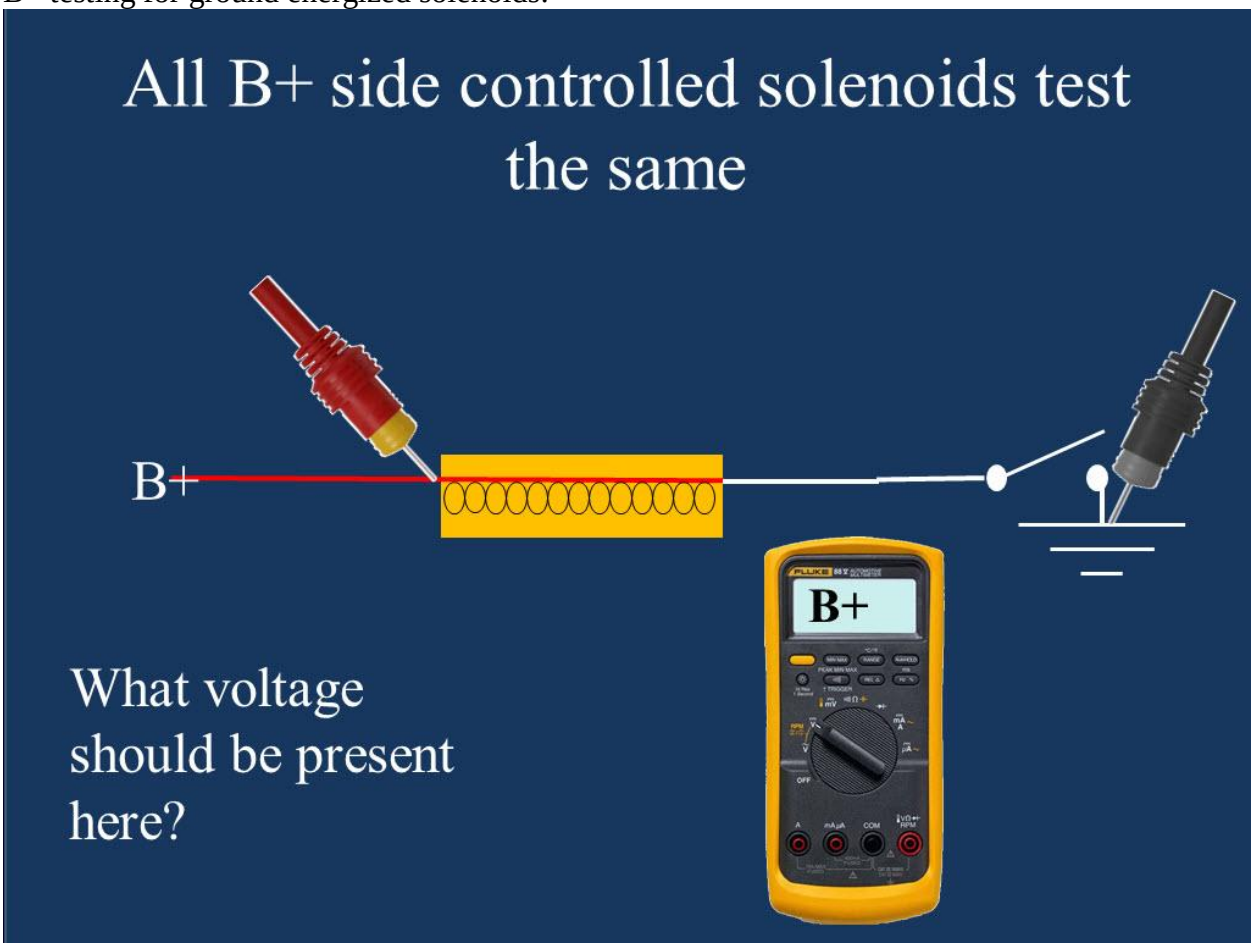

Ground energized solenoids will have B+ on the ground side when the solenoid is off.

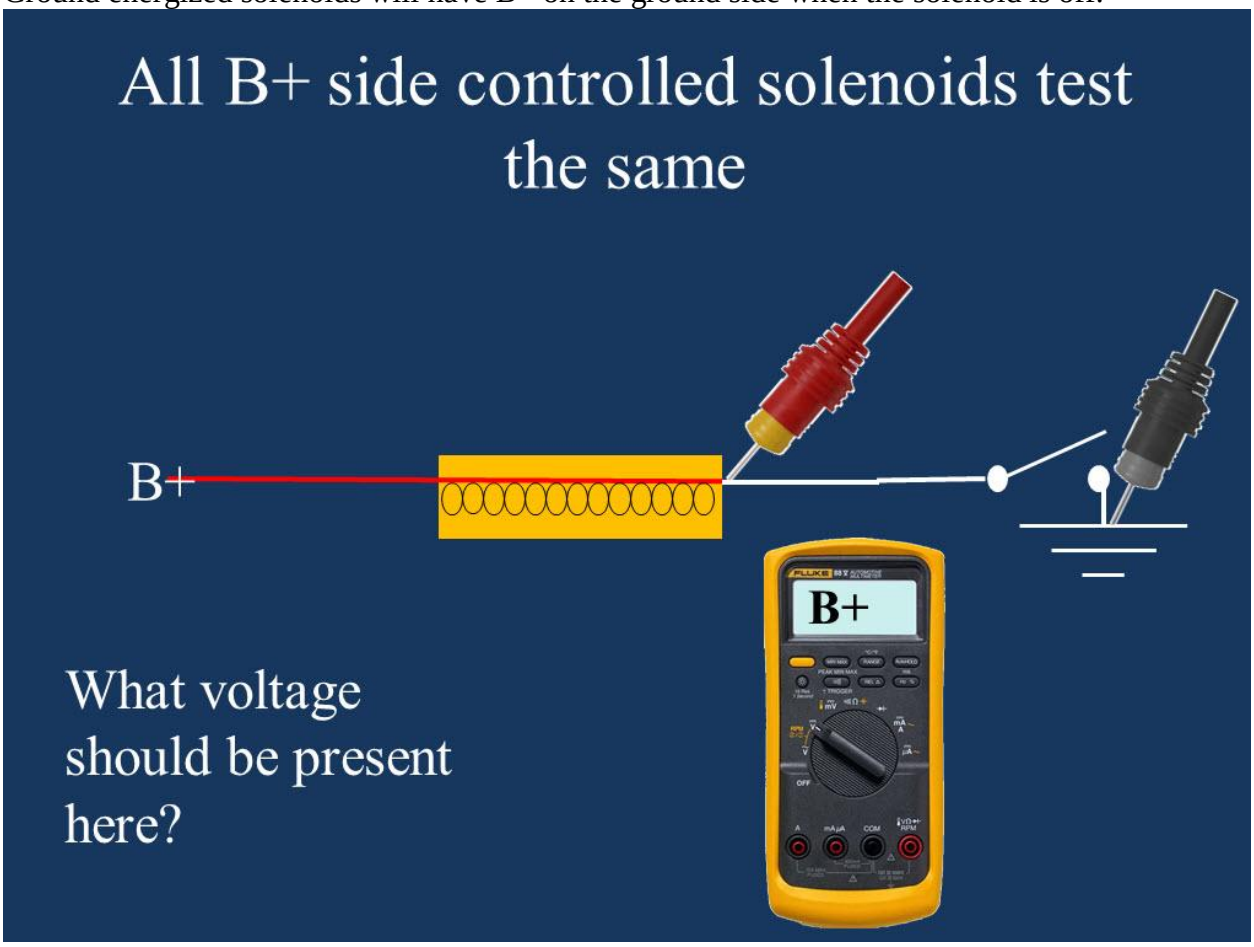

Ground energized solenoids will have low voltage on the ground side when the solenoid is energized.

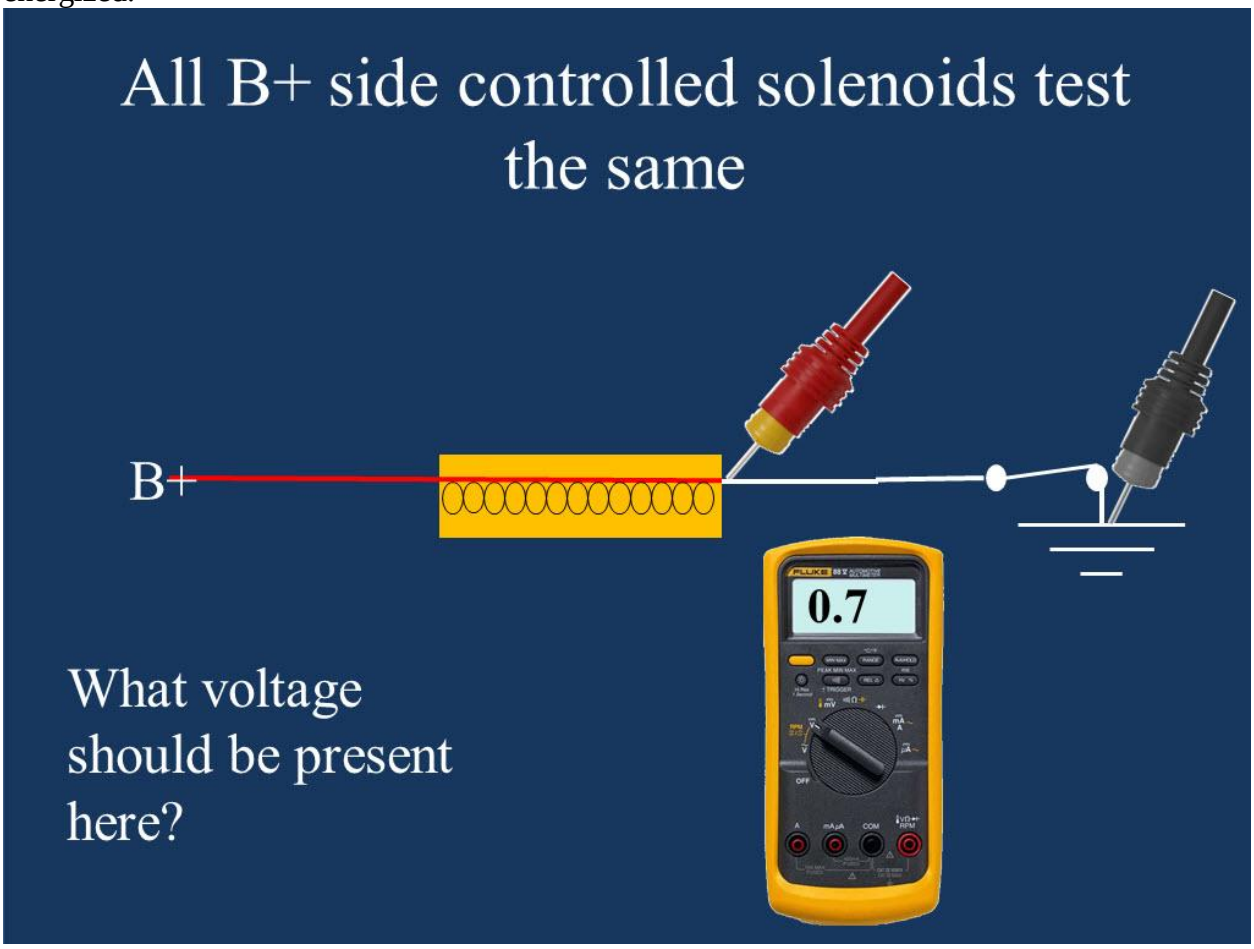

An amp meter can be used to complete the circuit to energize a solenoid.

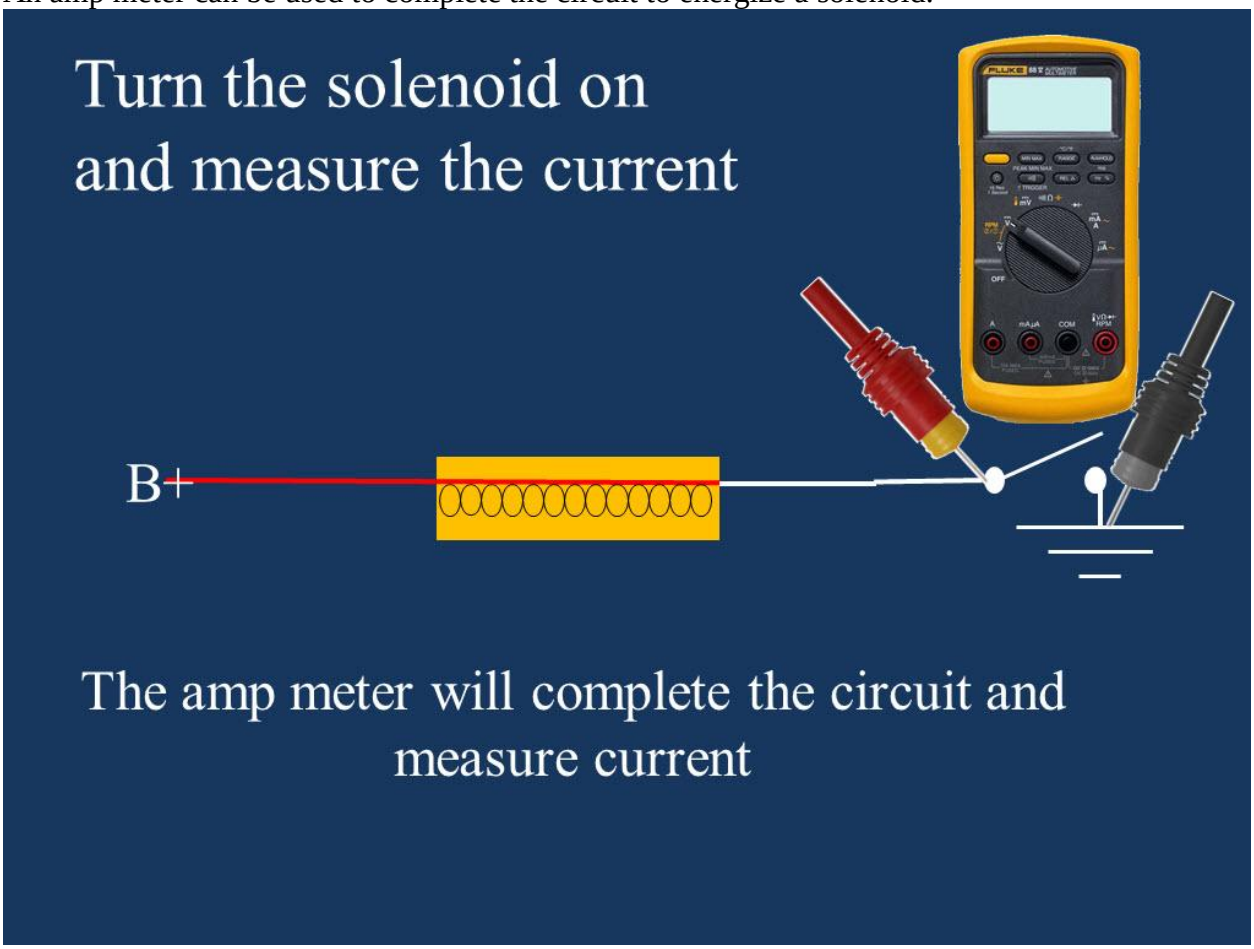

Solenoids can be tested with resistance but it is not as reliable as testing current flow.

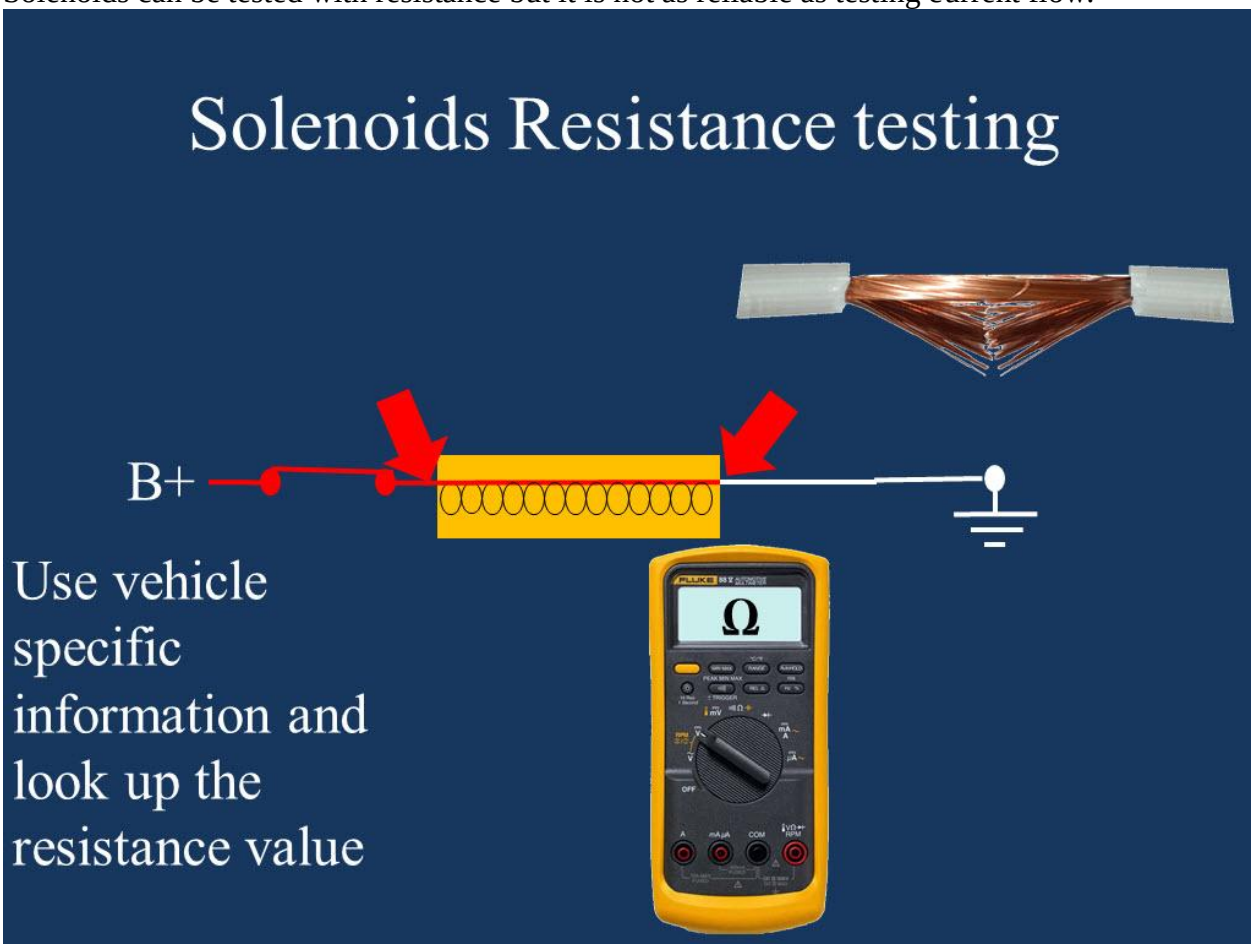



Solenoid coil with the case removed.

On ground side controlled solenoids measure the voltage at the control side of the solenoid with it not grounded. The voltage should be equal to Battery voltage. Use the Bi-directional controls on a scan tool and command the solenoid on. The voltage should fall to around 0.70 volts.

A best test is to complete the ground with an ammeter and measure the solenoid's current draw. Remember; I = E ÷ R. It told us that current is a property of resistance and voltage. If the current draw is normal so will the power, ground, and device.

Transducers (Sensors):

A manifold absolute pressure sensor (MAP) is a pressure transducer.

A mass air flow sensor (MAF) is an air flow transducer.

The fuel tank pressure sensor is a pressure sensor.

These sensors change pressure, air flow, and notion into an electrical signal which can be measured.

There are digital and analog sensors. A digital sensor changes pressure into a digital signal and the analog into a voltage.

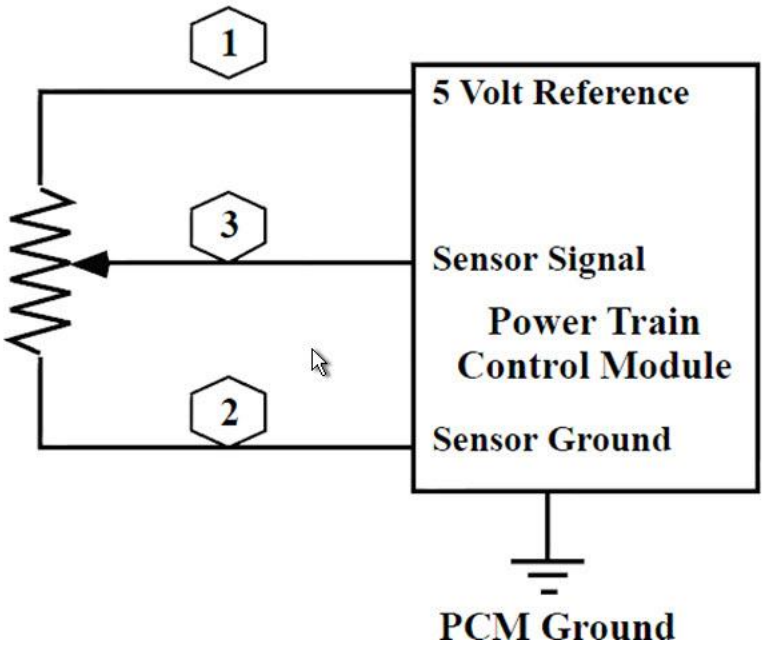

Manifold Absolute Pressure Sensor:

The Manifold Absolute Pressure Sensor (MAP) changes pressure into an electrical signal.

Digital sensor

Altitude	Baro Pressure	Frequency
0 to 1,000'	29-30"	159-163 Hz
1,000-2,000'	28-29"	153-157 Hz
2,000-3,000'	27-28"	150-153 Hz
3,000-4,000'	26-27"	147-153Hz
4,000-5,000'	25-26"	144-150Hz
5,000-6,000'	24-25"	141-147Hz
6,000-7,000'	23-24"	139-145Hz

Analog sensor

Altitude	Baro Pressure	Voltage
0 to 1,000'	29-30"	4.5-4.8 V
1,000-2,000'	28-29"	4.3-4.5V
2,000-3,000'	27-28"	4.1-4.3 V
3,000-4,000'	26-27"	3.9-4.1 V
4,000-5,000'	25-26"	3.8-4.0 V
5,000-6,000'	24-25"	3.7-3.9 V
6,000-7,000'	23-24"	3.6-3.8 V
7,000-8,000'	22-23"	3.4-3.6 V
8,000-9,000'	21-22"	3.3-3.5 V
9,000-10,000'	20-21"	3.1-3.3 V

It receives a 5 volt reference from the PCM. (4.9 to 5.1 volts)

There is a ground circuit and it should be: (less than 0.05 volts)

A signal circuit sends the signal to the PCM (see chart)

Mass Air Flow Sensor:

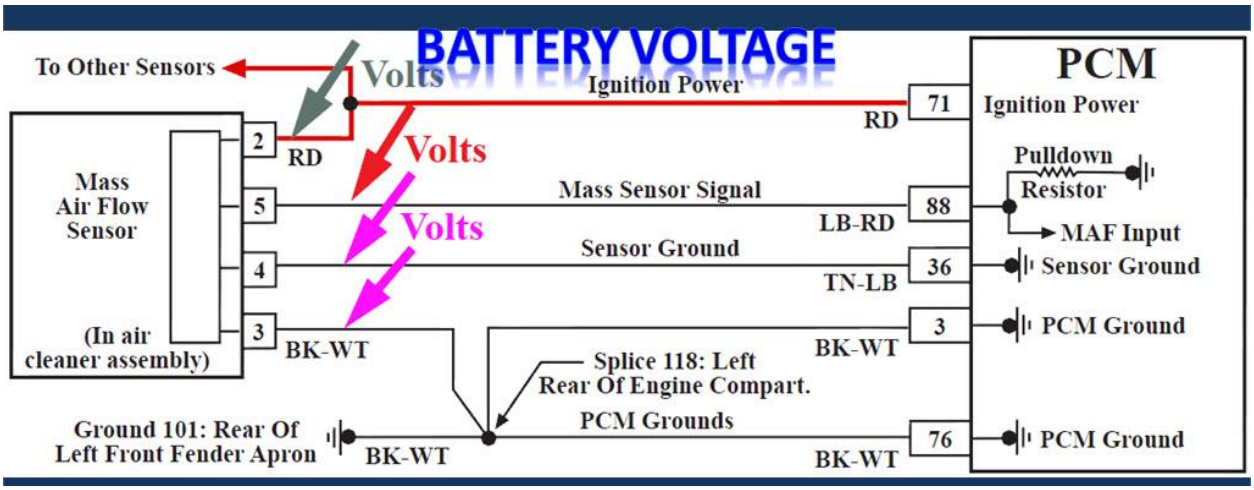

The Mass Air Flow Sensor (MAF) changes air flow into an electrical signal. There are voltage based and frequency based sensors. The sensors change air flow into a voltage or frequency signal.

The ignition power circuit should be battery voltage.

The MAF signal should represent the amount of incoming air.

Both the sensor's ground circuits should be less than 0.050 volts.

An example of specifications for a MAF sensor.

MAF Volts	Grams Per Second of Air Flow
0.34 V	1.28 GPS
0.39 V	1.48 GPS
0.50 V	1.93 GPS
0.60-0.90 V	2.37-5.80 GPS
1.00 V	6.97 GPS
1.96 V	26.16 GPS
3.90 V	148.16 GPS

DSO test for MAF sensor reaction to snap acceleration test.

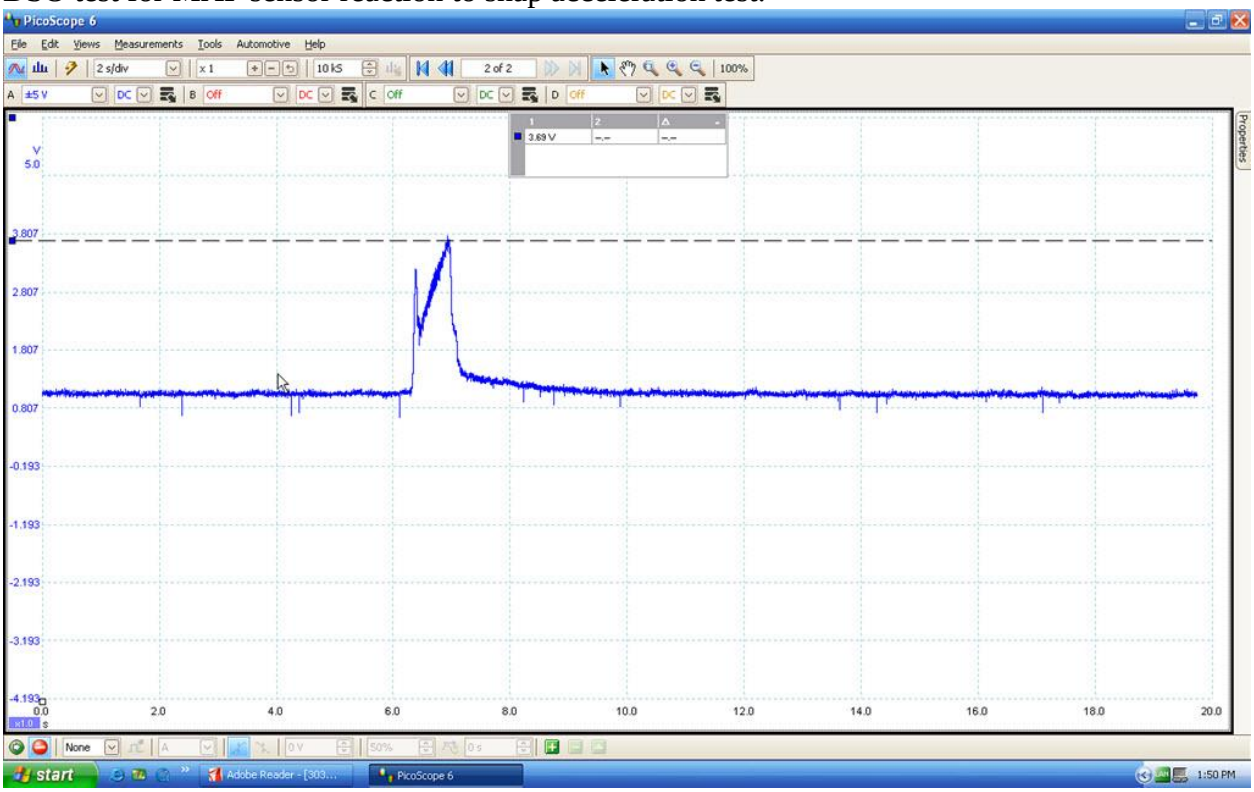

The voltage relates to how much air is entering in grams per second (GPS). The charts help you determine the GPS.

Example for fuel tank pressure sensor testing.

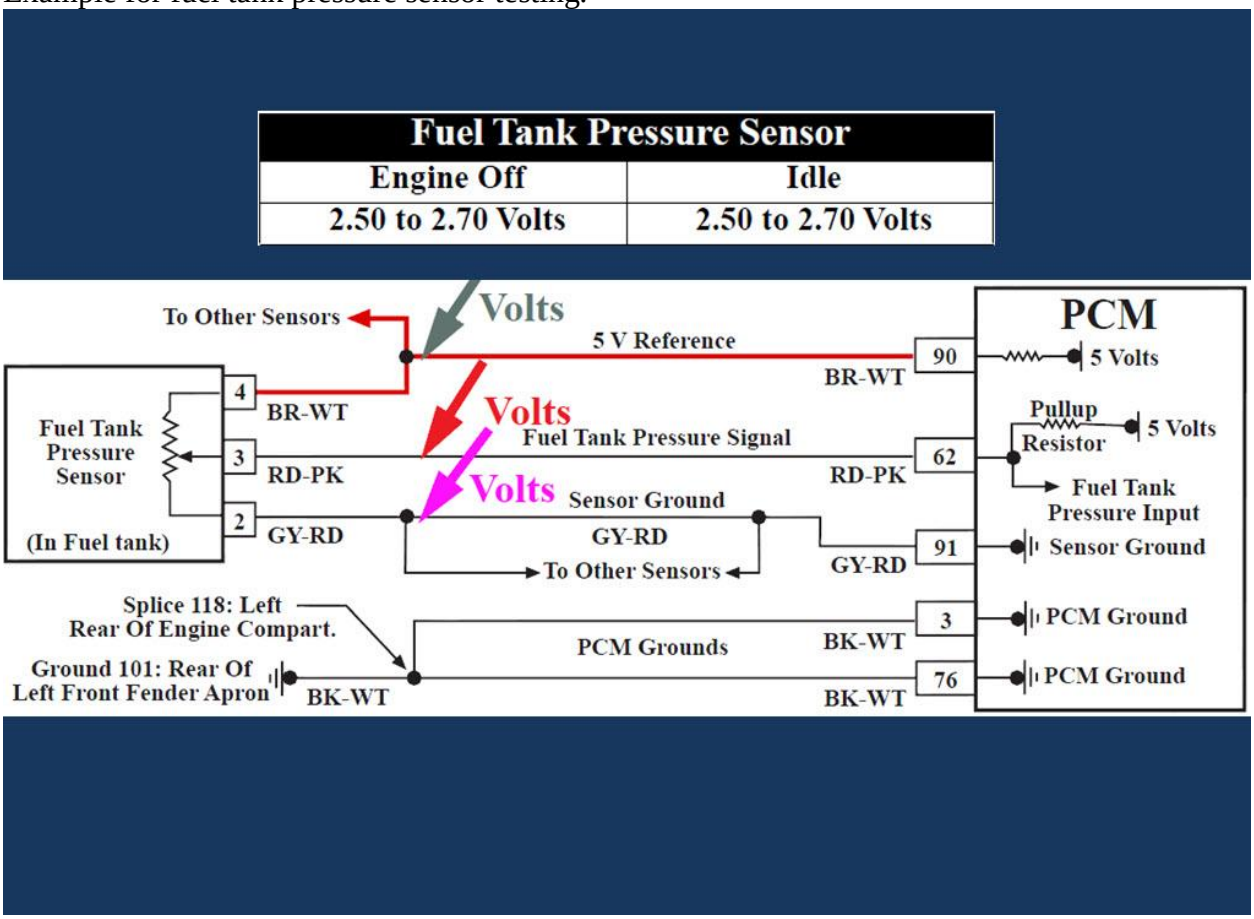

Ford fuel tank pressure sensor signal during an Evap leak test,

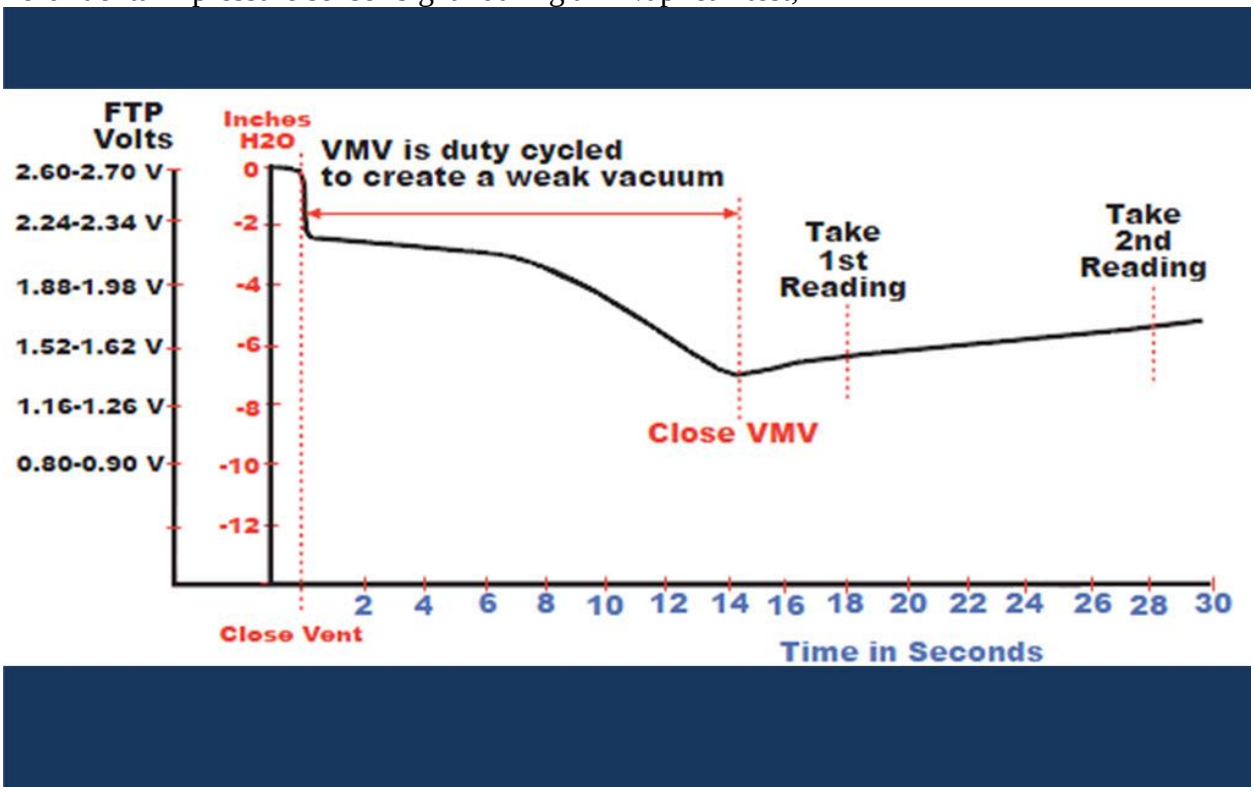

Diagnostic information in this example is for testing the fuel tank pressure sensor.

Fuel Tank Pressure Sensor	
Engine Off	At Idle
1.40-1.60 Volts	1.40-1.60 Volts

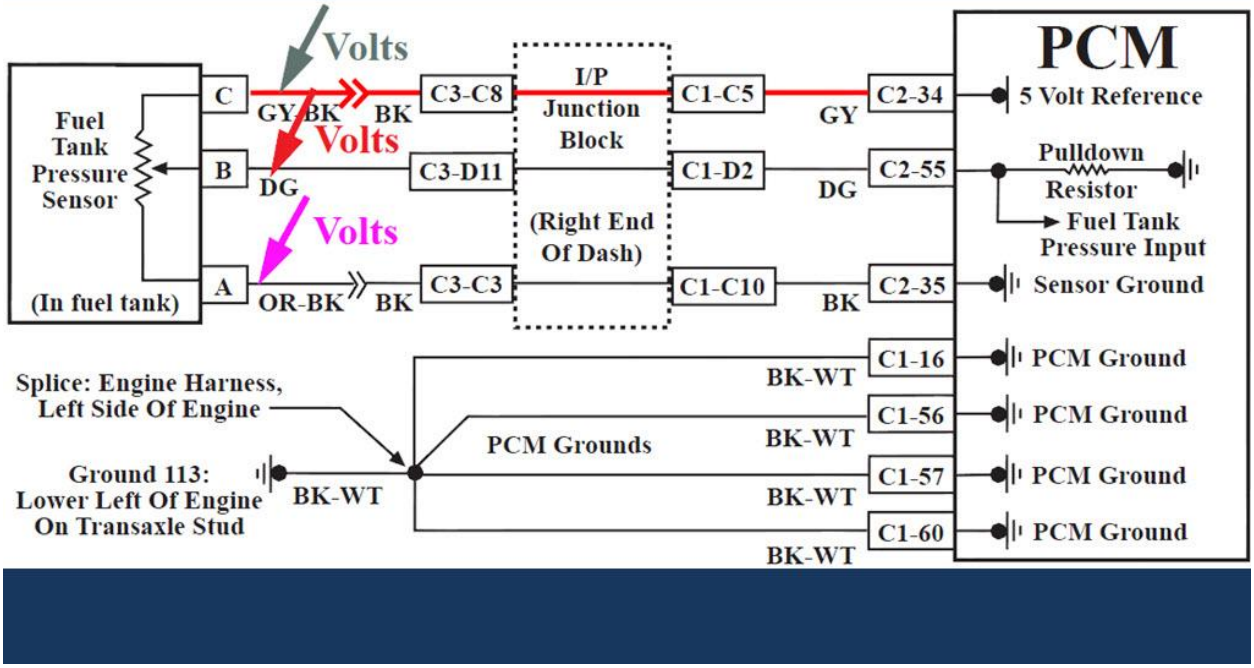

GM fuel tank pressure sensor signal during an Evap leak test,

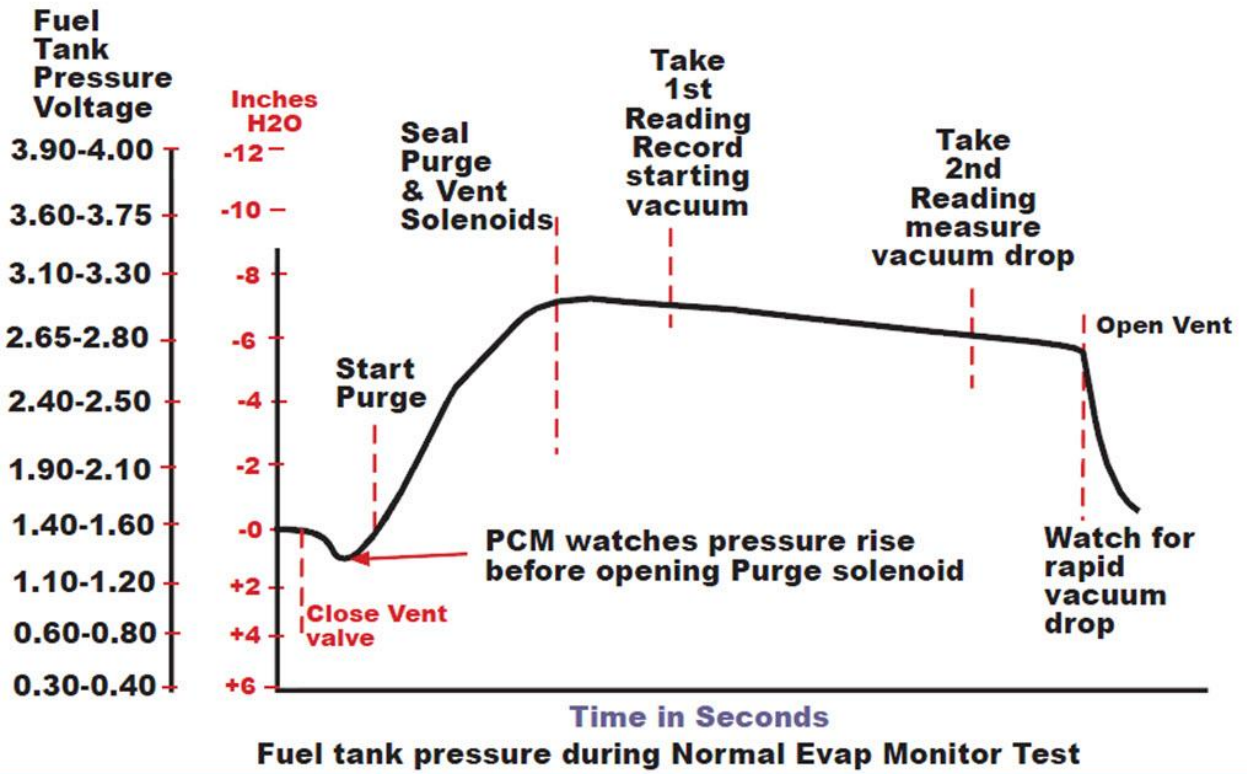

Fuel tank pressure sensor:

The fuel pressure sensor I a pressure transducer that changes pressure into a voltage signal. When the pressure in the fuel tank increases and decreases with expansion and contraction the sensor's voltage changes. Most manufacturers use the same basic sensor. Ford's signal decreases when fuel pressure increases and others are the opposite. They increase in voltage when fuel pressure increases.

Testing the sensors are the same. Voltage reference should be 4.9 to 5.1 volts. The signal should represent the actual pressure. And the ground circuit should be less than 0.050 volts.

Pressure transducer signal.

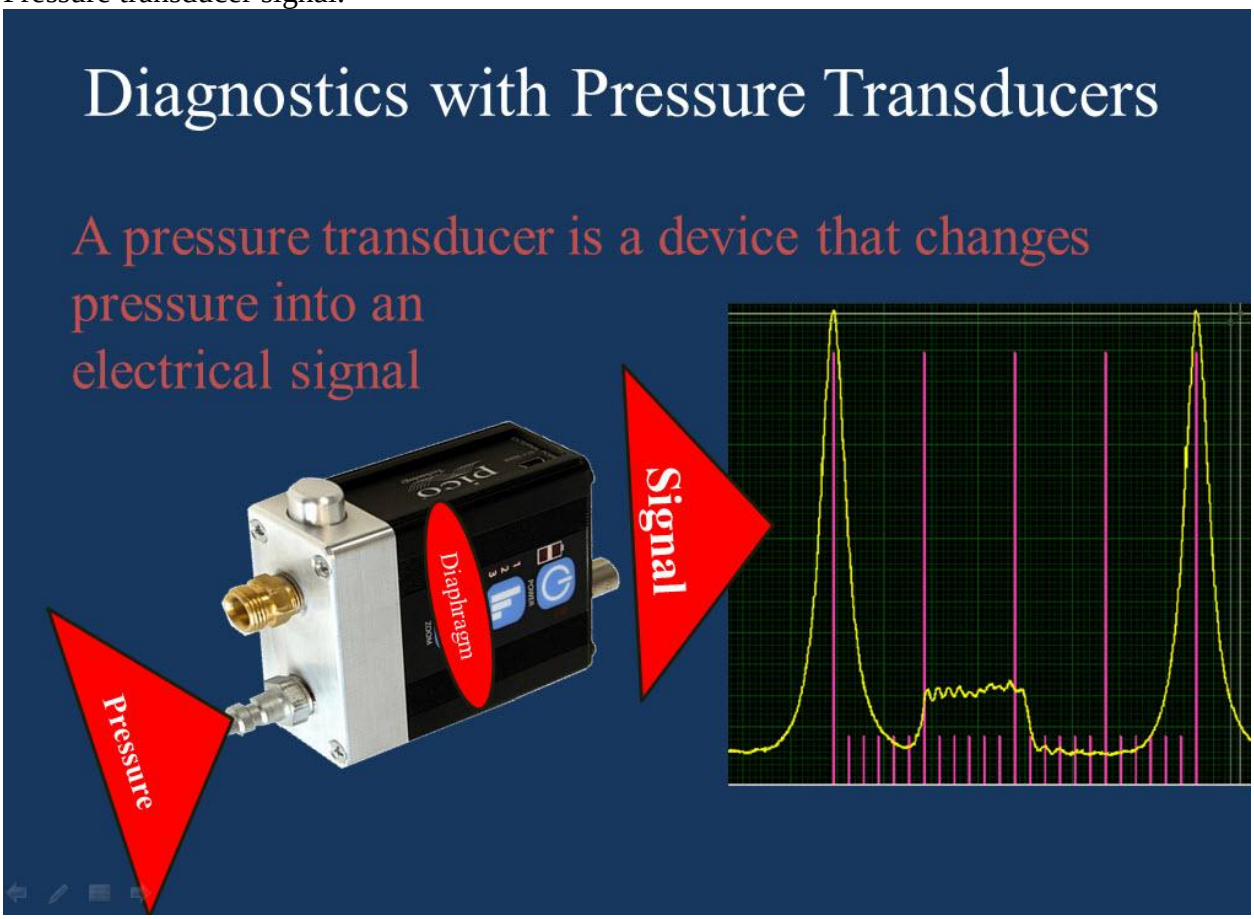

Diagnostics with Pressure Transducers:

A pressure transducer is a device that changes pressure into an electrical signal. It has an input port to connect it to a cylinder, or to measure exhaust pressure. There is an electrical output to connect it to a digital storage scope. Pressure is the result of a piston raising and falling in the cylinder. As the piston raises pressure builds and as it falls pressure falls. If the intake and exhaust valves and the piston rings are sealing good the pressure will be equal between cylinders and within normal specifications.

Cam timing belt found by checking cylinder pressure waveforms.



Learn to read the pressure waveform:

Bank #1 (rear cylinders) the Pressure Transducer revealed; that the Exhaust timing is retarded by approx. 100 degrees.

RETARDED VALVING TIMING= VALVE OPENING MOVE TO RIGHT.

ADVANCED VALVE TIMING = VALVE OPENING MOVE TO THE LEFT.

The major problem was that Bank #1 (rear cylinders) exhaust cam was severely retarded. (Exhaust cam gear was retarded 7 teeth due to a defective timing belt)

Test setup for testing cylinder pressure.



Pressure waveform signal.

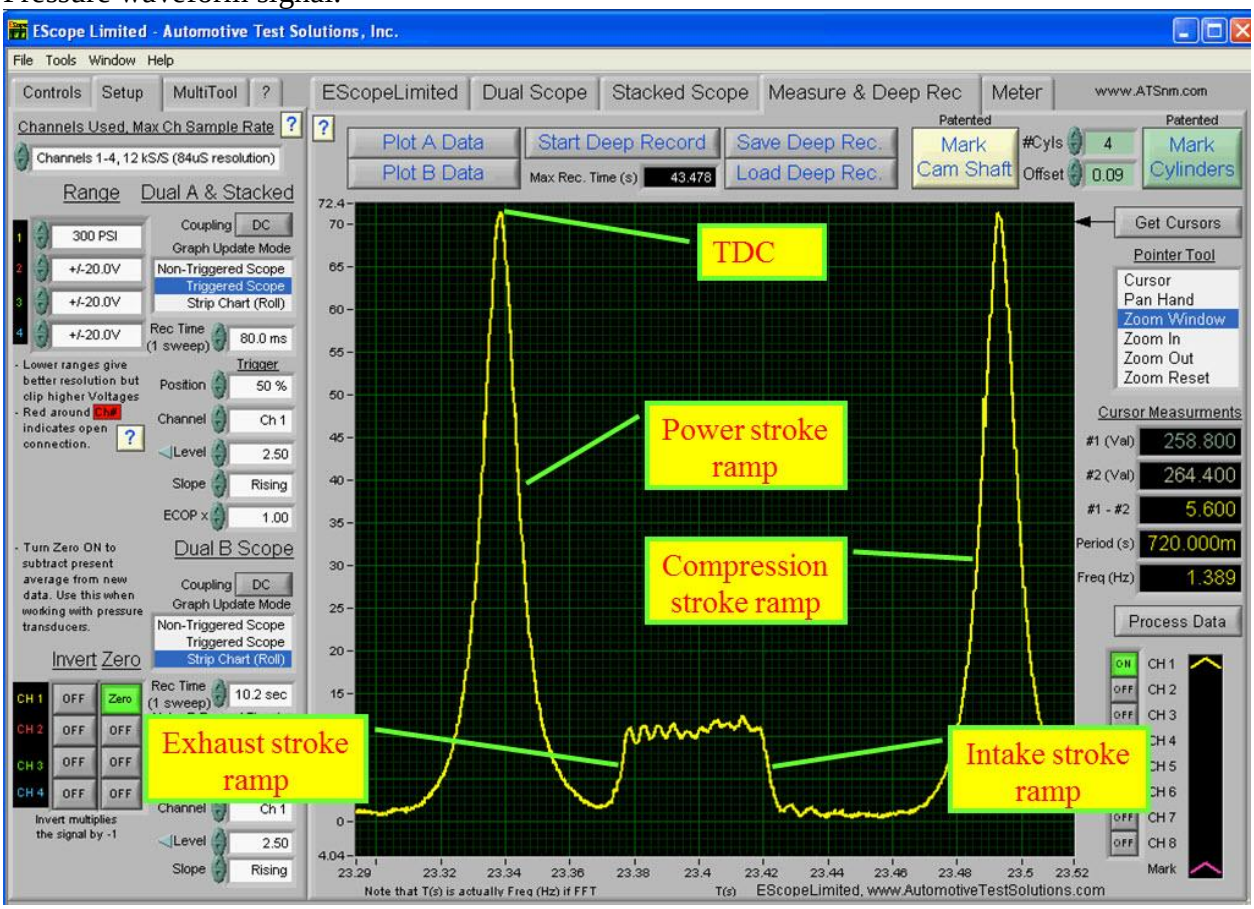

Analyzing valve timing by using the pressure waveform signal.

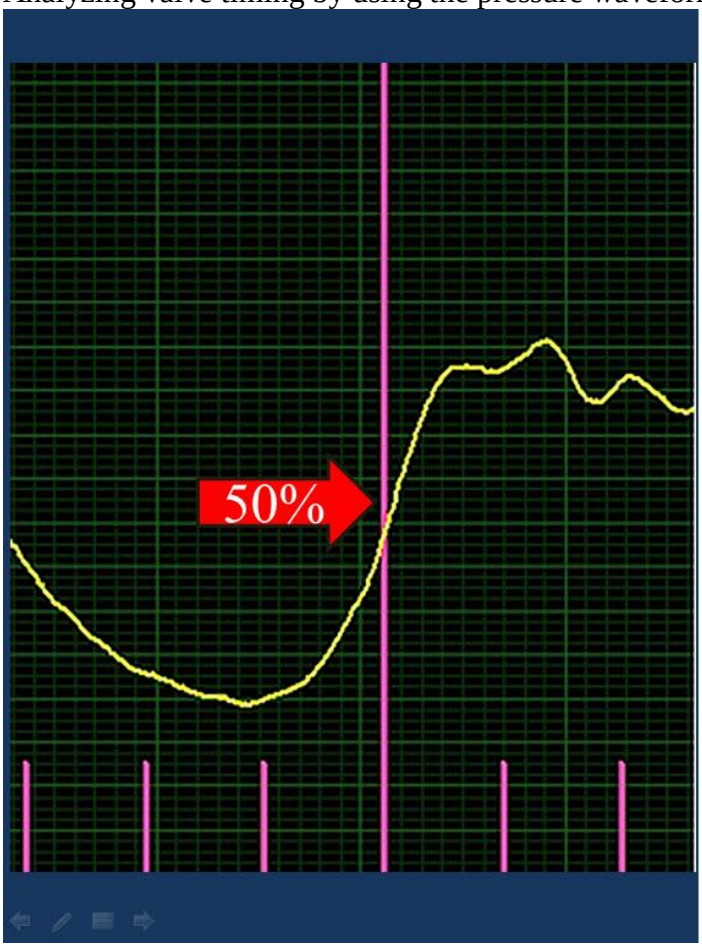

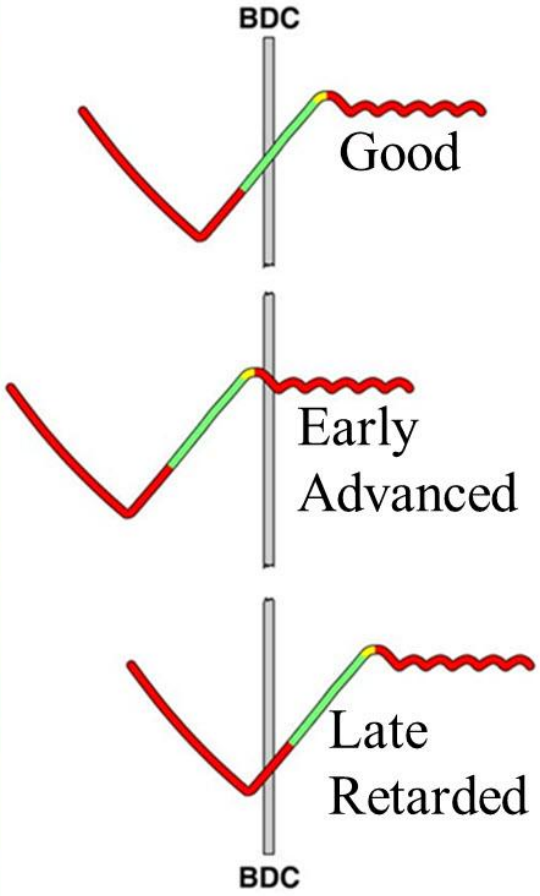

Good and bad pressure waveforms and the diagnostic results.

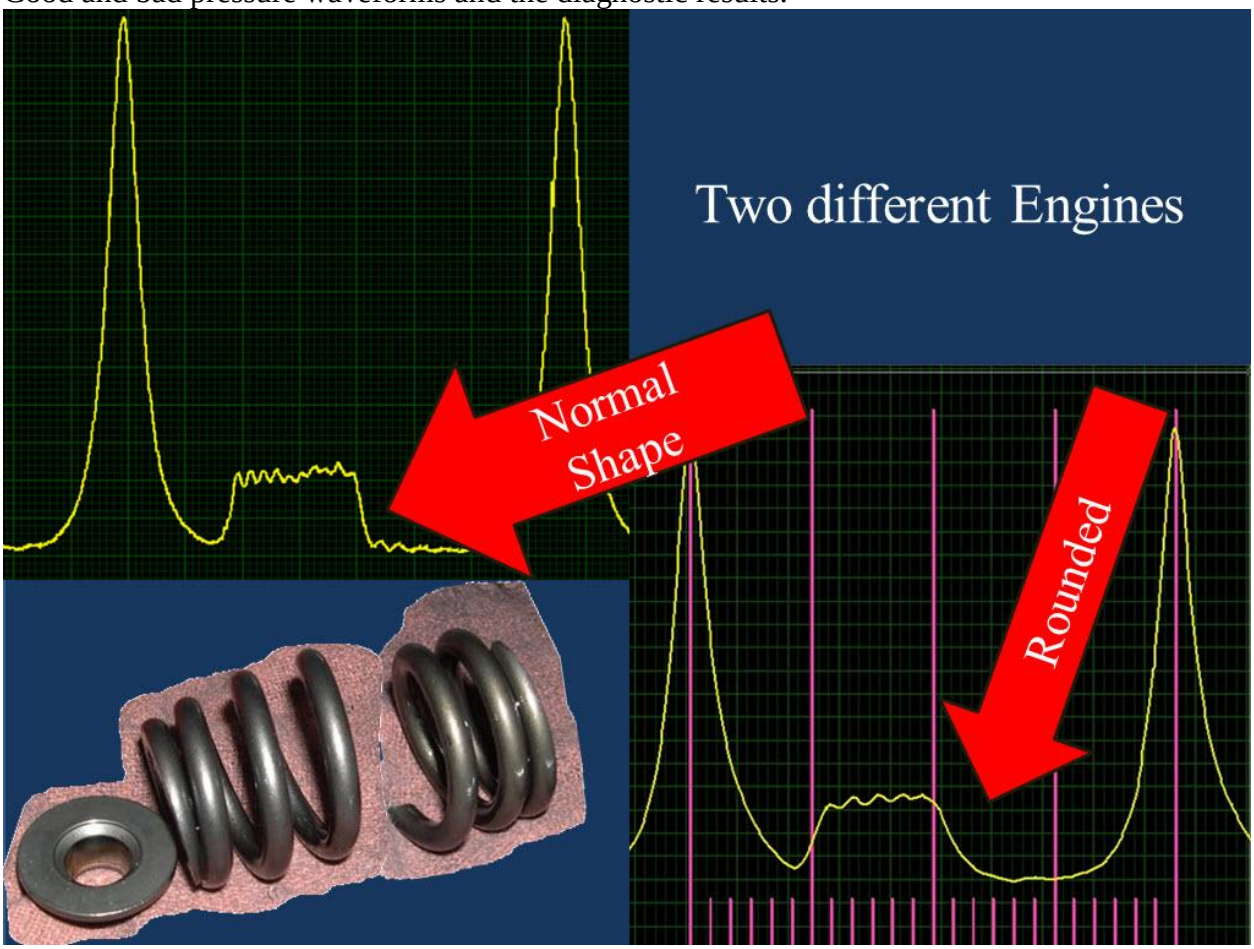

To test the basic engine operation, remove a spark plug and install the pressure transducer. The image shows the pressure transducer installed, the plug wire connected to a spark tester, and the DSO ready to start testing.

1. The first step is to capture the waveform
2. Then with this software you will need to use the DSO's zoom function and zoom in on the pattern
3. You may have to zoom in further to see the detail in the pattern (Zooming with this software changes the time base of the DSO)
4. After zooming we can see the engine's four cycles clearly.
5. Look for large variations in the TDC peeks indicating uneven compression
6. The next step in using the software is to place a cursor on the two TDC peeks
7. Click on the Mark Cam Button
8. Zoom again
9. Look at the marker as where the exhaust ramp crosses. The marker should cross the ramp at approximately 50% of the total exhaust ramp pattern. If the marker falls between 10° below or 15° above the 50% point, the cam timing is considered to be within normal range. If the marker crosses above or below by too much cam timing is too early or too late.

10. Place a cursor at 20° after the TDC marker. This cursor will represent intake timing
11. Look at the marker as where the intake ramp crosses. The marker should cross the ramp at approximately 50% of the total intake ramp pattern. If the marker falls between 20° below or 20° above the 50% point, the cam timing is considered to be within normal range. If the marker crosses above or below by too much cam timing is too early or too late.
12. 12. Look for anomalies in the pattern. The waveform on the right is an engine where on cylinder's exhaust valve isn't closing correctly. Disassembly and inspection showed a broken valve spring.

Exhaust pressure pattern measurement set up.



Pattern caused by a weak cylinder.

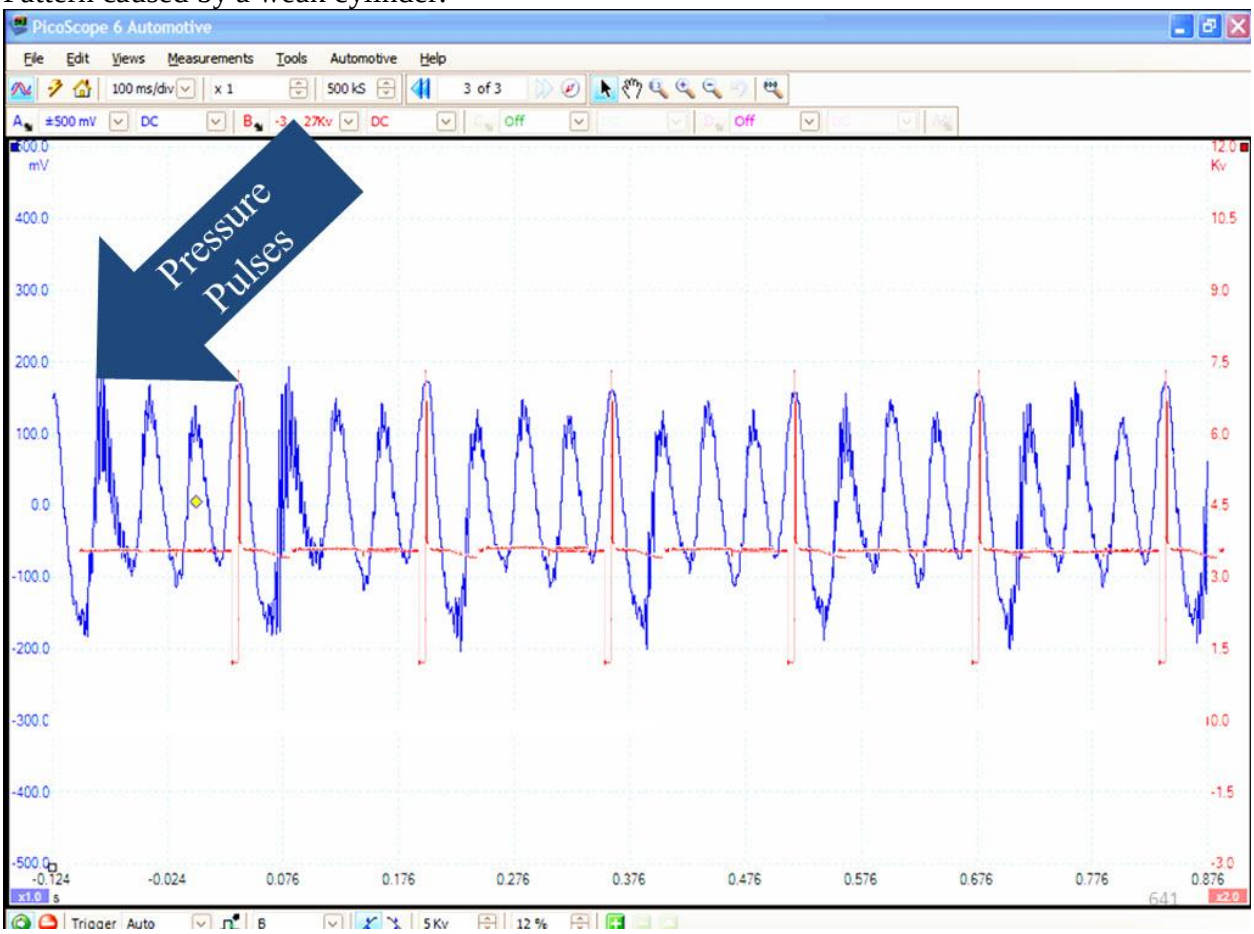

This is a waveform from a Sen-X First Look pressure transducer. Sen-X First Look pressure transducer is placed in the tail pipe and connected to a DSO. As with any other transducer it changes exhaust pressure pulses into an electrical signal. The second signal in the waveform is number one injector. This is a four cylinder engine. The injector signal appears every time it fires so we know that is cylinder number one. Knowing the engine's firing order we can tell which cylinder is different from the others. The problem appears to be on the second cylinder in the firing order.

The pressure transducers can be used anywhere there is pressure.

- Cylinders
- Exhaust
- Fuel Rail

Fig 132

Power Probe III:

The Power Probe is a tool that will help with electrical diagnostics. It can't replace other equipment, but comes in handy for

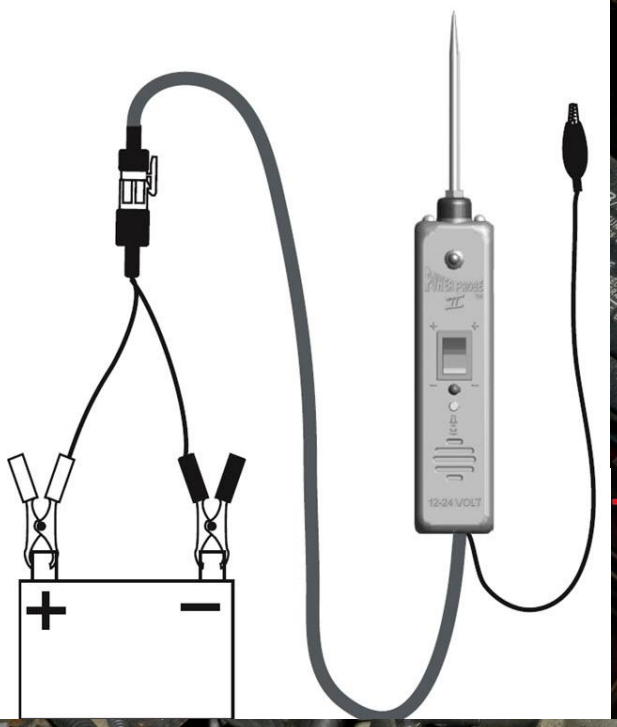

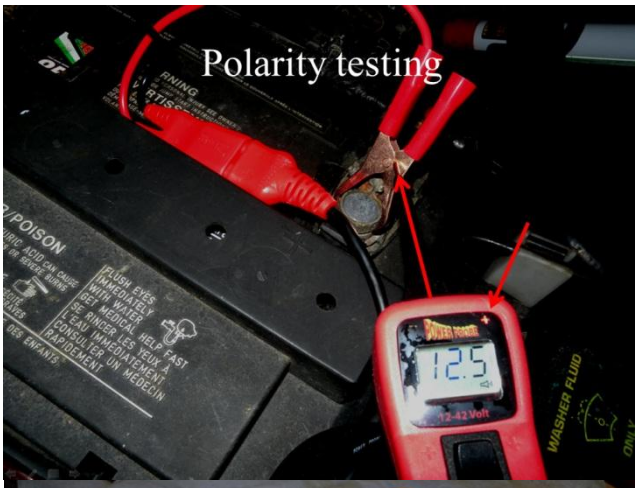





down and quick common testing. We don't sell equipment and won't receive and compensation for telling you about it, we simple feel as educators it is our responsibility to keep you informed of what's out there. Power style probes come in different forms and packages. We use the Power Probe II and it comes with the Probe, 20 feet of cable, and a cigar lighter adaptor. We also have the 20 foot extension cable.



Read the instructions one time. Take it and go to a vehicle and do each test that is in the book. It can be completed in about 15 minutes so were not asking a lot.

Fig 136

Logic Probe:

A logic probe doesn't detect an exact voltage, but rather detects whether the signal is high or low as in communication signals.

It is used to detect logic levels. Is the signal changing state?

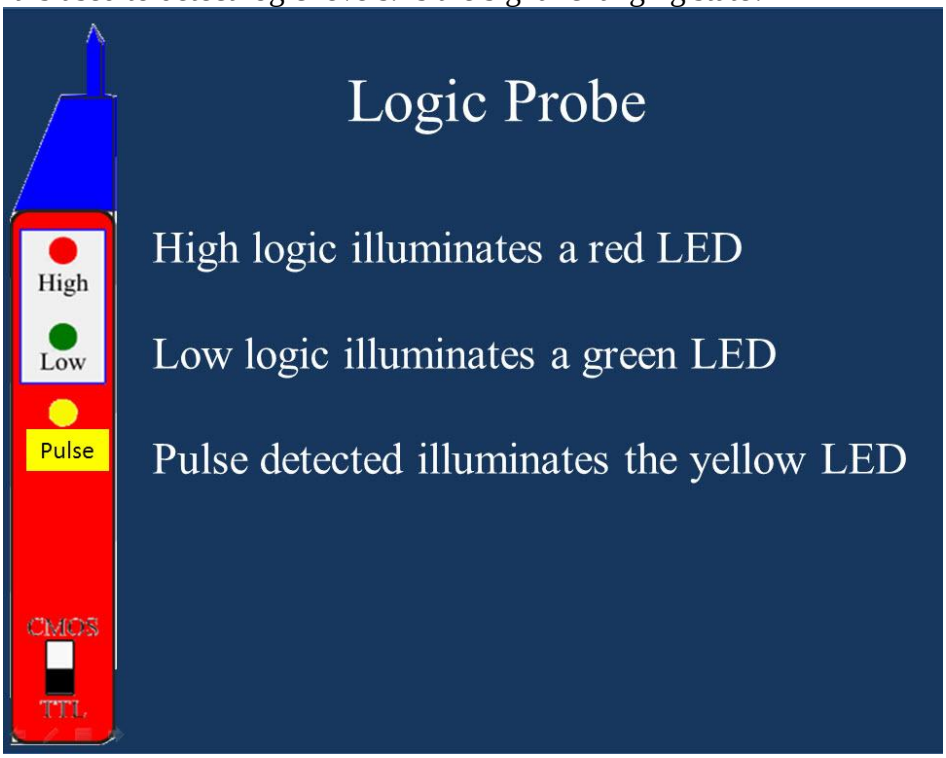

Check the manual first, our probe:

High logic illuminates a red LED

Low logic illuminates a green LED

Pulse detected illuminates the yellow LED

Circuit type selection